Lutz
The Fluid Managers

Lutz Drum Pumps and Flow Meters for the Food, Pharmaceutical and Cosmetics Industry

Certified Solutions

NEW: Eccentric Screw Pumps B70V SanitaryPlus

Safety is our Concern

Lutz Pumps and Flow Meters
for the Food, Pharmaceutical and Cosmetics Industry

During food production, raw materials and finished food products come into contact with various objects and materials, and must be suitable for this. This also includes devices and machine parts for commercial food production. These are defined as “food contact materials” and are specified in food product legislation.

Regulation (EC) 1935/2004

Pumps and flow meters in contact with food products are also considered to be food contact materials and are thus subject to strict legal regulations. In accordance with EU Regulation no. 1935/2004, these are to be produced in accordance with good manufacturing practice and may not release substances which pose a hazard to the health, cause unacceptable changes to the food products or impair their odour or taste. Lutz drum pumps, flow meters and accessories meet the requirements of Regulation (EC) 1935/2004 and bear the “glass and fork” symbol to indicate their suitability for foodstuffs. The associated Regulation (EC) 10/2011 on plastics in contact with foodstuffs lists the migration values of chemicals which may not be exceeded in defined reagent tests.

FDA Approval

The Food and Drug Administration in the USA certifies materials and substances and also defines limit values for extractable substances which must be complied with, as is the case with elastomers for aqueous or fatty food products (21 CFR 177.2600).

USP – U.S. Pharmacopeial Convention

The United States Pharmacopeial Convention, Inc. is a scientific nonprofit organization that sets standards for the identity, quality, and purity of medicines, food ingredients, and dietary supplements manufactured, distributed, and consumed worldwide. It provides documentary standards and reference materials to help manufacturers, suppliers, and regulators to safeguard the dietary supplement supply, and limit adulterants and contaminants.

3-A Sanitary Standard

Beyond the safety of the materials used, the 3-A Sanitary Standard places stringent design requirements calling for a hygienically flawless and easy-to-clean design. The new Lutz B70V SanitaryPlus pumps consistently meet the requirements for hygienic design and are certified in accordance with the current version of the "3-A Sanitary Standards for Centrifugal and Positive Rotary Pumps" and are thus equipped for the international market.

Lutz B70V SanitaryPlus pumps are consistently designed with manually detachable, threadless connections in areas coming into contact with liquids. They are quick and easy to dismantle for thorough cleaning and disinfection by hand or with tools such as a water stream or cleaning machines. All products covered in the product are easily accessible and visible.

ATEX Directive

Pumps and flow meters from the PURE and Sanitary series are also available in an explosion-proof version in accordance with ATEX Directive 2014/34/EU. They are well-suited for pumping highly flammable liquids in food and beverage production, such as alcohols, essential oils and flavourings, as well as cleaning products and disinfectants used for cleaning purposes.

The Production Range at a Glance

Eccentric Screw Pumps
Lutz B70V SanitaryPlus

- Hygienically designed according to the latest 3-A standards
- Easily accessible and inspectable components
- Thread-free, manually detachable quick connections
- Polished metal surface
- Quick to dismantle, easy to clean
- Also for alcoholic food products, cosmetics and pharmaceuticals and flammable cleaning products
- For liquid foodstuffs and luxury foodstuffs, pharmaceutical substances and cosmetic products

Eccentric Screw Pumps Lutz B70V SanitaryPlus
Page 4-15

Suitable Accessories
Page 48-53

Pumps and Flow Meters in
PURE Version

- Physiologically safe type
- High surface quality
- Food-safe connections
- Also for alcoholic food products, cosmetics and pharmaceuticals and flammable cleaning products

Pumps and Flow Meters in Pure Version
Page 16-47

Suitable Accessories
Page 54-59

Lutz B70V SanitaryPlus

Designed according to the latest standards for high demands of the food-, pharmaceutical and cosmetics industry

When using hygienic pumps, the operator expects besides a high system availability and low maintenance requirement an absolutely perfect hygienic and easy to clean design. The B70V SanitaryPlus here sets new standards with its one-piece joint-free drive shaft and consistently without threads in the hydraulic area. Only a few components reduce the assembly and dismantling times as well as the cleaning effort for approx. 80%.

Our commitment:
To satisfy the high criteria and demands set by standards

Hygienic aspect:

Consequently realized

The new eccentric screw pump Lutz B70V SanitaryPlus was developed and designed for pumping liquid foodstuffs, pharmaceutical agents and cosmetic products from different vessels and containers. This new development strictly meets the constructive requirements of the hygienic design and is certified and approved according to the latest “3-A Sanitary Standards”.

Benefits of the Lutz B70V SanitaryPlus

- No-thread-design in the hydraulic area
- One-piece drive shaft for perfect hygiene
- Long operating times due to contamination-proof and sterile pump design
- Delivery volume proportional to speed
- Temporary reversible conveying direction
- Continuous and low pulsation pumping, nearly independent from pressure- and viscosity fluctuations
- Stable suction- and pressure capacities
- Service-friendly
- Housing design, free of dead space for good flow properties
- Wetted surfaces with a polished finish prevent the accumulation of liquid and facilitate the cleaning

Versatile and variable:

With a flow rate of 12 to 50 l/min and an operating pressure of max. 10 bar, the Lutz B70V SanitaryPlus hygienic pump is suitable for pumping thin-bodied to highly viscous media.

The chosen immersion depth and the small immersion tube diameter ensure that drums, IBC containers and other commercially available containers are emptied safely and almost completely without residue from the top.

Lutz Eccentric Screw Pumps

Characteristics and Construction

All areas coming into contact with the liquid being pumped are equipped with manually detachable, non-threaded connections. The design is almost free of dead space, thus microbiological problems caused by germs and bacteria are practically impossible.

Quick cleaning
For a fast and thorough cleaning and disinfection by hand or mechanically by means of water jets or cleaning machines, the Lutz B70V SanitaryPlus can be quickly and easily dismantled. All parts coming into contact with the liquid are easy accessible for inspection and service. This pump is a solution for application cases where the use of a CIP pump is technically impossible.

All parts coming into contact with the product are made of resistant stainless steel (1.4404/1.4462/1.4571), 3-A/FDA compliant plastics (PTFE) and elastomers(EPDM).

Jetzt Produktvideo ansehen!

Lutz B70V SanitaryPlus

Just a few components – minimum wear and fast to clean

Up to **80%** faster assembly/ disassembly due to just a few components!

4 **Improvement of anti-twist protection**
Easy and fault-free assembly of the pump without special tools

5 **Housing design free of dead space**
Microbiological problems caused by germs and bacteria are therefore practically impossible

High application possibility
The pump covers a wide range of applications in the Food- and Pharma- Industry due to the certification.
The user-friendly design and the easy cleaning make the pump very interesting for the chemical industry where requirements of the applications often change and therefore an easy cleaning is required.

1 **Smooth surface**
Fast to clean (less than Ra 0,8 at product contacted surfaces) and thus protection of bacterial contamination

2 **Improved stator fixing**
Easy assembly and change of the stator with locking pin and anti-twist protection

3 **Tri-Clamp connections**
Hygienic and user-friendly Tri-Clamp connections acc. to DIN 32676 for easy assembly

6 **No-Thread-Design**
One-piece drive shaft for perfect hygiene

Function

An impulse transmitter transfers magnetic impulses of the rotating motor shaft contact-free to the impulse sensor. The measured impulses are evaluated in the Lutz operating unit BE10 and appear on the display by means of the pre-determined calibration factor as transferred flow quantity.

Hygienic and without wear:

Contact-free flow measurement

For the Lutz eccentric screw pumps a lifting device with integrated impulse sensor for indirect flow measurement was developed. The contact-free mode of measurement is very interesting for hygienic applications in the food-, pharmaceutical- and cosmetics industry, as well as for industrial applications with viscous, adhesive and solid containing liquids.

The time-consuming cleaning process of the flow meter system is not necessary and as experience has shown, conventional volumetric flow meters quickly come in these circumstances to their limit, while other measuring methods are often very complex and/or are not suitable for mobile use.

The contact-free, indirect mode of measurement with impulse sensor from Lutz is a hygienic, wear-free and reliable option without direct contact with the liquid being pumped.

Features and Benefits

- Compact and easy to handle unit for maximum mobility
- All live-/data elements on the motor-/lifting-device unit
- Pump tube can be detached from motor-/lifting-device with a quick-action coupling
- Pump tube without electronic components enables a thorough cleaning and disinfection also by means of water jets or in cleaning machines
- Easy handling and control with the Lutz operating unit with touch screen display and menu-navigation in plain text
- Can be combined with relay module RM10 and other modules of the Lutz flow meter programme

Order instructions for contact-free flow measurement

Page 60-61

Lutz®
The Fluid Managers

Lutz Eccentric Screw Pumps

B70V-H-SR SanitaryPlus 12.1, 25.1, 50.1

Product detail

Pump tube		B70V-H-SR SanitaryPlus		
Size		**12.1**	**25.1**	**50.1**
Seal	Mechanical seal (MS)	MS	MS	MS
Delivery rate*	up to l/min.	12	25	50
Delivery head*	up to bar	6	6	8
Temp. of medium	max. °C	100	100	100
Material outer tube		1.4404	1.4404	1.4404
Immersion tube diameter	mm	54	54	54
Pressure joint	Tri-Clamp	DN 50	DN 50	DN 50
Weight	kg	8	8	8
Length**	mm	1100	1100	1100
Stator EPDM Seal EPDM	Order-No.	–	–	**0174-548**
Stator PTFE Seal FPM	Order-No.	**0174-094** ●	**0174-194** ●	**0174-594** ●
Stator PTFE Seal EPDM	Order-No.	**0174-044** ●	**0174-244** ●	**0174-544** ●

* Determined with water at 20 °C, three-phase motor (900 rpm)
** Special length on request

● Explosion proof eccentric screw pump approved category 1 / 2 (acc. to ATEX) for pumping flammable liquids of the explosion group IIB (B70V-H) and temperature class T4 at 40 °C ambient temperature or temperature class T3 at 60 °C ambient temperature

Choice of motors

Universal motors non-ex. proof	MI 4	MI 4-E	MA II 3	MA II 5	MA II 7
Type Protection class/Weight	500 W, 230 V IP 24 2.8 kg without speed contr.	500 W, 230 V IP 24 2.8 kg with speed contr.	460 W, 230 V IP 54 4.6 kg	575 W, 230 V IP 54 5.4 kg	795 W, 230 V IP 54 6.6 kg
Order-No. (without low-voltage release)	**0030-000**	**0030-001**	**0060-000**	**0060-001**	**0060-002**
Order-No. (with low-voltage release)	–	–	**0060-008**	**0060-009**	**0060-010**

Universal motors explosion proof	ME II 3	ME II 5	ME II 7	ME II 8
Type Protection class/Weight	460 W, 230 V IP 54 5.5 kg	580 W, 230 V IP 54 6.3 kg	795 W, 230 V IP 54 7.5 kg	930 W, 230 V IP 54 8 kg
Order-No. (with low-voltage release)	**0050-000**	**0050-001**	**0050-002**	**0050-042**
Order-No. (without low-voltage release)	**0050-016**	**0050-017**	**0050-018**	**0050-041**

B70V-H-SR SanitaryPlus 12.1, 25.1 and 50.1

for viscosities up to 30,000 mPas

Materials (coming into contact with the pumped medium):

Version:	B70V-H-SR SanitaryPlus 12.1/25.1/50.1
Housing:	SS (1.4404)
Rotor/Shaft:	SS (1.4571, 1.4462)
Seals:	EPDM, FPM
Mechanical seal:	SiC/carbon/EPDM (FPM), optional SiC/SiC/EPDM (FPM)
Stator material:	PTFE, EPDM (Size 50.1)

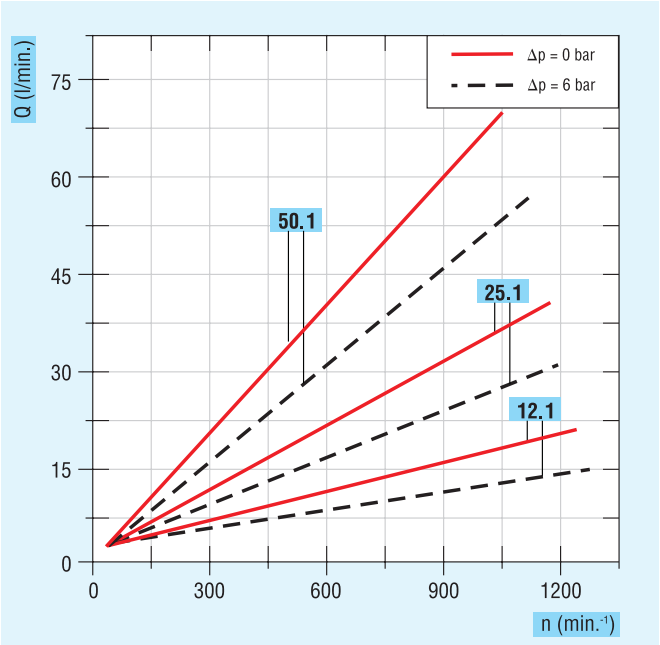

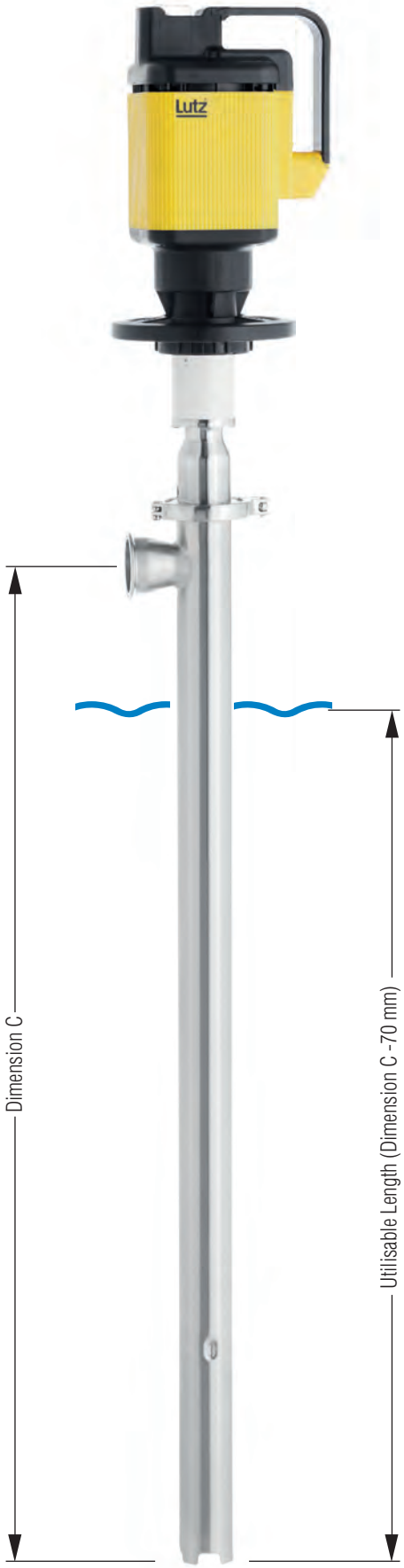

Lutz Eccentric Screw Pumps

B70V-H-D SanitaryPlus 12.1, 25.1

Product detail

Pump tube		B70V-H-D SanitaryPlus	
Size		**12.1**	**25.1**
Seal	Mechanical seal (MS)	MS	MS
Delivery rate*	up to l/min.	12	25
Delivery head*	up to bar	6	8
Temp. of medium	max. °C	100	100
Material outer tube		1.4404	1.4404
Immersion tube diameter	mm	54	54
Pressure joint	Tri-Clamp	DN 50	DN 50
Weight	kg	8	8
Length**	mm	1100	1100
Stator PTFE Seal FPM	Order-No.	**0172-094** ●	**0172-194** ●
Stator PTFE Seal EPDM	Order-No.	**0172-044** ●	**0172-144** ●

* Determined with water at 20 °C, three-phase motor (900 rpm)
** Special length on request

● Explosion proof eccentric screw pump approved category 1 / 2 (acc. to ATEX) for pumping flammable liquids of the explosion group IIB (B70V-H) and temperature class T4 at 40 °C ambient temperature or temperature class T3 at 60 °C ambient temperature

Choice of motors

Three-phase motors 230/400 V, 50 Hz, RAL 9005,

Energy efficiency class IE 3 in accordance with EU regulations 640/2009 and 04/2014.

Sonderspannungen, Frequenzen, Schutzarten auf Anfrage.

Motors with protection switch	For B70V-H-D SanitaryPlus - 12.1		For B70V-H-D SanitaryPlus - 25.1	
Type	0.37 kW 700 1/min.	0.55 kW 900 1/min.	0.55 kW 700 1/min.	0.75 kW 900 1/min.
Protection class/Weight	IP 54 16 kg	IP 54 12 kg	IP 54 16 kg	IP 54 22 kg
Order-No.	**0172+802**	**0172+805**	**0172+808**	**0172-900**

Motore, explosionsgeschützt	For B70V-H-D SanitaryPlus - 12.1		For B70V-H-D SanitaryPlus - 25.1	
Type	0.37 kW, 700 1/min.	0.55 kW, 900 1/min.	0.55 kW, 700 1/min.	0.65 kW, 900 1/min.
Type of protection	II 2 G Ex e II T3	II 2 G Ex e II T3	II 2 G Ex e II T3	II 2 G Ex e II T3
Protection class/Weight	IP 55 19 kg	IP 55 17 kg	IP 55 22 kg	IP 55 20 kg
Order-No.	**0172-801**	**0172-804**	**0172-807**	**0172-810**

Motors with frequency converter	For B70V-H-D SanitaryPlus - 12.1	For B70V-H-D SanitaryPlus - 25.1	
Type	0.55 kW, 0-900 1/min.	0.55 kW, 0-900 1/min.	0.75 kW, 0-900 1/min.
Protection class/Weight	IP 55 16 kg	IP 55 16 kg	IP 55 22 kg
Order-No.	**0172-769**	**0172-769**	**0172-768**

Motors with cable terminal box	For B70V-H-D SanitaryPlus - 12.1		For B70V-H-D SanitaryPlus - 25.1	
Type	0.37 kW, 700 1/min.	0.55 kW, 900 1/min.	0.55 kW, 700 1/min.	0.75 kW, 900 1/min.
Protection class/Weight	IP 54 16 kg	IP 55 12 kg	IP 55 16 kg	IP 55 22 kg
Order-No.	**0172+803**	**0172+806**	**0172+809**	**0172-901**

B70V-H-D SanitaryPlus 12.1, 25.1

for viscosities up to 100,000 mPas

Materials (coming into contact with the pumped medium):

Version:	B70V-H-D SanitaryPlus 12.1/25.1
Housing:	Stainless steel (1.4404)
Rotor/Shaft:	Stainless steel (1.4571, 1.4462)
Seals:	EPDM
Mechanical seal:	SiC/carbon/EPDM (FPM), optional SiC/SiC/EPDM (FPM)
Stator material:	PTFE, EPDM (Size 50.1)

Equipped with mounting strap and motor quick coupling as standard.

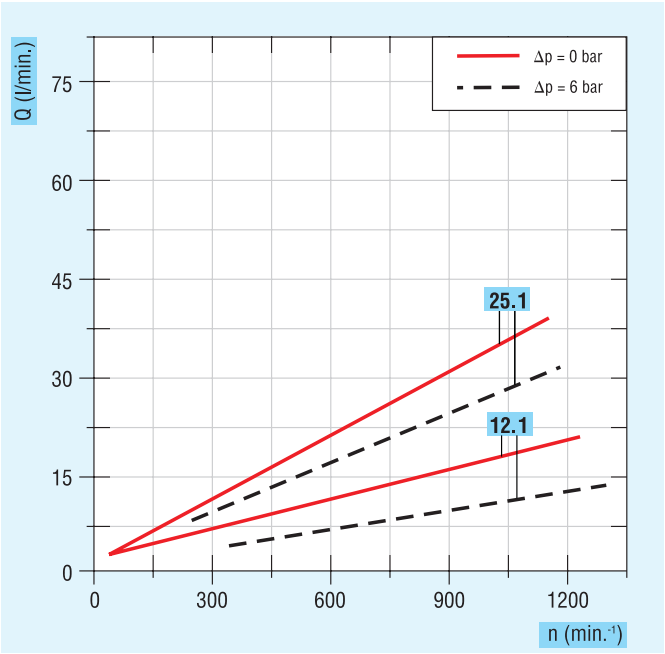

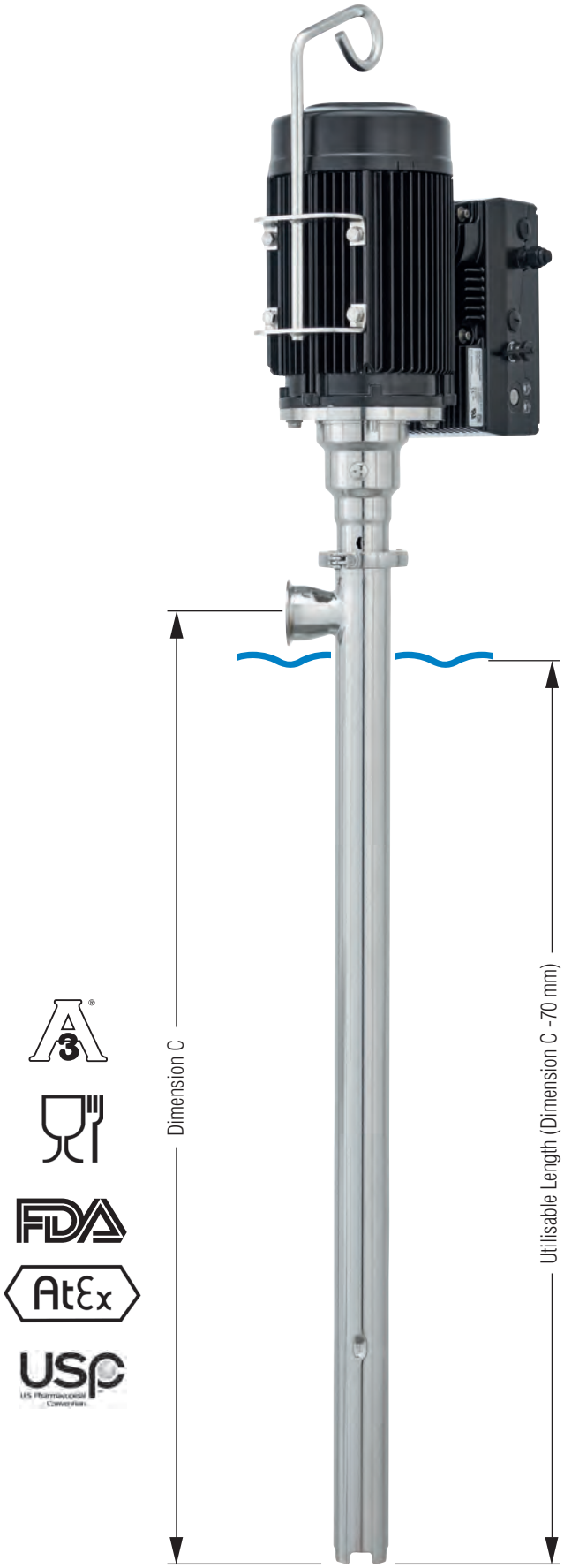

Lutz Eccentric Screw Pumps

B70V-H-D SanitaryPlus 25.2, 50.1, 75.1

Product detail

Pump tube		B70V-H-D SanitaryPlus		
Size		**25.2**	**50.1**	**75.1**
Seal	Mechanical seal (MS)	MS	MS	MS
Delivery rate*	up to l/min.	25	50	75
Delivery head*	up to bar	10	8	6
Temp. of medium	max. °C	100	100	100
Material outer tube		1.4404	1.4404	1.4404
Immersion tube diameter	mm	54	54	54
Pressure joint	Tri-Clamp	DN 50	DN 50	DN 50
Weight	kg	8	8	8
Length**	mm	1100	1100	1100
Stator EPDM Seal EPDM	Order-No.	**–**	**0172-548**	**–**
Stator PTFE Seal FPM	Order-No.	**0172-294** ●	**0172-594** ●	**0172-584** ●
Stator PTFE Seal EPDM	Order-No.	**0172-244** ●	**0172-544** ●	**0172-554** ●

* Determined with water at 20 °C, three-phase motor (900 rpm) **Special length on request

● Explosion proof eccentric screw pump approved category 1 / 2 (acc. to ATEX) for pumping flammable liquids of the explosion group IIB (B70V-H) and temperature class T4 at 40 °C ambient temperature or temperature class T3 at 60 °C ambient temperature

Choice of motors

Three-phase motors 230/400 V, 50 Hz, RAL 9005,

Energy efficiency class IE 3 in accordance with EU regulations 640/2009 and 04/2014.

Sonderspannungen, Frequenzen, Schutzarten auf Anfrage.

Motors with protection switch	For B70V-H-D SanitaryPlus - 25.2 and 50.1			For B70V-H-D SanitaryPlus - 75.1	
Type	0.75 kW 700 1/min.	1.1 kW 700 1/min.	1.1 kW 900 1/min.	1.5 kW 700 1/min.	1.5 kW 900 1/min.
Protection class/Weight	IP 54 18 kg	IP 54 22 kg	IP 54 34 kg	IP 54 34 kg	IP 54 34 kg
Order-No.	**0172+814**	**0172+825**	**0172-902**	**0172-760**	**0172-904**

Motore, explosionsgeschützt	For B70V-H-D SanitaryPlus - 25.2 and 50.1		For B70V-H-D SanitaryPlus - 75.1	
Type	0.65 kW, 700 1/min.	1.0 kW, 900 1/min.	1.3 kW, 900 1/min.	1.9 kW, 900 1/min.
Type of protection	II 2 G Ex e II T3	II 2 G Ex e II T3	II 2 G Ex e II T3	II 2 G Ex e II T3
Protection class/Weight	IP 55 27 kg	IP 55 23 kg	IP 55 40 kg	IP 55 52 kg
Order-No.	**0172-813**	**0172-816**	**0172-856**	**0172-857**

Motors with frequency converter	For B70V-H-D SanitaryPlus - 25.2 and 50.1		For B70V-H-D SanitaryPlus - 75.1
Type	0.75 kW 0-900 1/min.	1.1 kW 0-900 1/min.	1.5 kW, 0-900 1/min.
Protection class/Weight	IP 55 22 kg	IP 55 25 kg	IP 55 37 kg
Order-No.	**0172-768**	**0172-767**	**0172-766**

Motors with cable terminal box	For B70V-H-D SanitaryPlus - 25.2 and 50.1			For B70V-H-D SanitaryPlus - 75.1		
Type	0.75 kW 700 1/min.	1.1 kW 700 1/min.	1.1 kW 900 1/min.	1.1 kW 700 1/min.	1.5 kW 700 1/min.	1.5 kW 900 1/min.
Protection class/Weight	IP 55 18 kg	IP 55 22 kg	IP 55 34 kg	IP 55 22 kg	IP 55 34 kg	IP 55 34 kg
Order-No.	**0172+815**	**0172+826**	**0172-903**	**0172+826**	**0172-761**	**0172-905**

B70V-H-D SanitaryPlus 25.2, 50.1, 75.1

for viscosities up to 100,000 mPas

Materials (coming into contact with the pumped medium):

Version:	B70V-H-D SanitaryPlus 25.2/50.1/75.1
Housing:	Stainless steel (1.4404)
Rotor/Shaft:	Stainless steel (1.4571, 1.4462)
Seals:	EPDM
Mechanical seal:	SiC/carbon/EPDM (FPM), optional SiC/SiC/EPDM (FPM)
Stator material:	PTFE, EPDM (Size 50.1)

Equipped with mounting strap and motor quick coupling as standard.

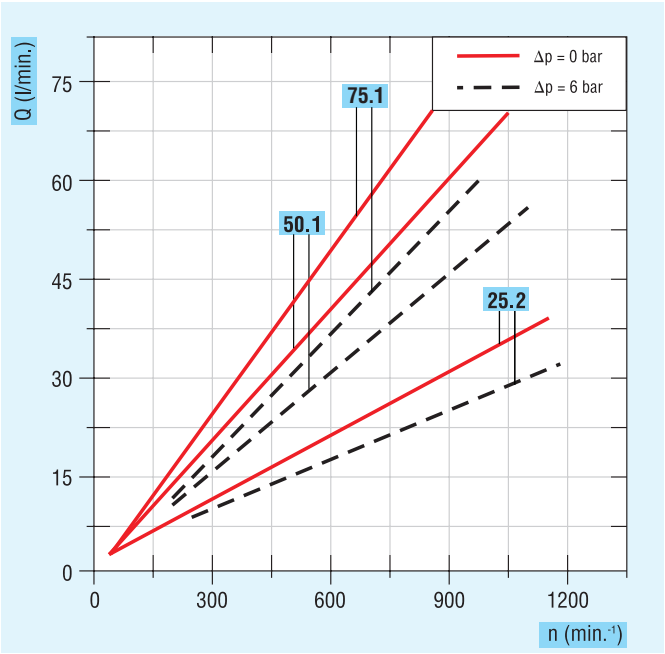

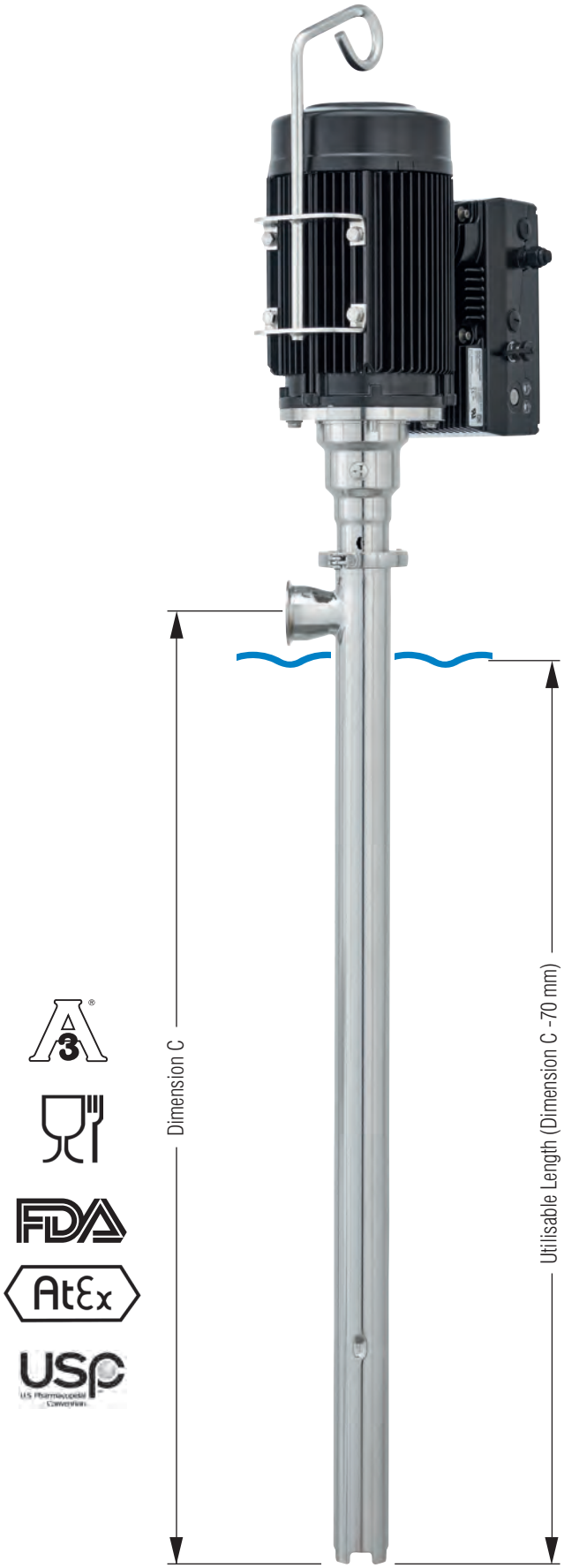

Lutz Drum and Container Pumps in PURE Version

Pumps and flow meters in contact with food products are considered to be "food contact materials" and are thus subject to strict legal regulations. The new Lutz PURE series includes products which are in conformity with the ATEX Directive as well as with the FDA Approval and the European Regulation according to 1935/2004/EC.

Lutz Drum Pumps
SS 41 in PURE Version

A versatile and variable drum pump ideal for corrosive and neutral, aqueous to slightly viscous fluids in the production and processing of food products.

- + Low weight, easy handling
- + Completely dismantable and cleanable
- + Two impeller forms for flow rate as required
- + Mechanically sealed (MS) version suitable for crystallizing and adhesive liquids, as well as liquids containing solids
- + Not filled with lubricants, preventing product contamination
- + Sealless version (SL) is suitable for limited dry running

Properties:

- Materials in contact with liquids in food quality
- Shaft seal: Mechanically sealed (MS) or sealless (SL)
- Lutz hand wheel for quick motor assembly/disassembly and as carry handle
- Optionally available with electrical drive with stageless speed controller
- Explosion-proof versions approved in accordance with the ATEX Directive 2014/34/EU Category 1/2

Lutz Complete Drum Drainage Pumps and Mixing Pumps
RE SS 41 and MP SS 41 in PURE Version

Lutz RE complete drum drainage pumps allow you to remove selected raw materials and valuable food products from drums and containers leaving virtually no residue.

- + Maximum pump utilisation and reduced drum cleaning effort
- + Completely dismantable and cleanable
- + Optimized complete drum drainage with a remaining residual quantity of approx. 0.1 liter
- + No leakage when the pump is turned over or at an inclined position
- + Also suitable for crystallizing and adhesive liquids, as well as liquids containing solids
- + Sealing mechanism in pump foot
- + Not filled with lubricants, preventing product contamination

PURE FDA

FDA AtEx

Lutz MP mixing pumps combine the function of agitator and pump in a single device. They are specifically developed for mixing and pumping food products which tend to form sediment after long periods of standing and must be homogenised before being processed.

- + Agitator and pump in a single device
- + Can change function during ongoing operation without having to be switched
- + High mixing performance and flow rate for thorough homogenisation and rapid drainage
- + Completely dismantable and cleanable
- + Also suitable for crystallizing and adhesive liquids, as well as liquids containing solids
- + Mixing apertures in the outer pipe can be opened and closed using a lever below the hand wheel
- + Not filled with lubricants, preventing product contamination

PURE FDA

FDA AtEx

Properties:

- Materials in contact with liquids in food quality
- Lutz hand wheel for quick motor assembly/disassembly and as carry handle
- Optionally available with electrical drive with stageless speed controller
- Explosion-proof versions approved in accordance with the EX Directive 2014/34/EU Category 1/2

Lutz Drum and Container Pumps

Pump tube SS PURE (stainless steel) for aqueous and fatty foodstuffs

Product detail

Pump tube		SS-SL		SS-MS	
Type of impeller		L	R	L	R
Category 1 / 2 (acc. to ATEX)		no	no	yes	yes
Immersion tube diameter:	up to mm	41	41	41	41
Temperature of medium:	up to °C	100	100	100	100
Material:	Pump tube	1.4571	1.4571	1.4571	1.4571
	Impeller	PP	SS	ETFE	ETFE
Hose connection:	Tri-Clamp DN	32	32	32	32
Length: 700 mm*** ▲	Order No. basic pump	**0150-003**	**0150-000**	**0151-003**	**0151-000**
Length: 1000 mm*** ▲	Order No. basic pump	**0150-004**	**0150-001**	**0151-004**	**0151-001**
Length: 1200 mm*** ▲	Order No. basic pump	**0150-005**	**0150-002**	**0151-005**	**0151-002**
Version: PURE SL ▲	Order No. additional price	**0150-350**	**0150-351**	–	–
Version: PURE MS FPM ▲	Order No. additional price	–	–	**0151-350**	**0151-351**
Version: PURE MS EPDM ▲	Order No. additional price	–	–	**0151-352**	**0151-353**

▲Please choose Order-No. basic pump + Order-No. PURE additional price

Choice of motors	MI 4	MI 4-E
	-	with speed controller
Output:	500 W	500 W
Voltage:	230 V	230 V
Order No.	**0030-000**	**0030-001**

Operating data		MI 4	MI 4-E	MI 4	MI 4-E
Characteristic curve no.		401	400	401	400
Flow rate*	up to l/min.	117	210	117	210
Delivery head*	up to m wc	19	10	19	10
Viscosity**	up to mPas	500	350	500	350
Density****	up to kg/dm³	1,4	1,1	1,4	1,1
Weight (kg)	Motor + pump tube	5,7	5,7	5,7	5,7

Choice of motors	MA II 3	
Output:	460 W	460 W
Voltage:	230 V	230 V
LVR.:	no	yes
Order No.	**0060-000**	**0060-008**

Operating data		MA II 3		MA II 3	
Characteristic curve no.		403	402	403	402
Flow rate*	up to l/min.	95	178	95	178
Delivery head*	up to m wc	14	9	14	9
Viscosity**	up to mPas	350	200	350	200
Density****	up to kg/dm³	1,6	1,2	1,6	1,2
Weight (kg)	Motor + pump tube	7,5	7,5	7,5	7,5

Choice of motors	MA II 5	MA II 5	MA II 5 S
Output:	575 W	575 W	575 W
Voltage:	230 V	230 V	230 V
LVR.:	no	yes	no
			acid-proof
Order No.	**0060-001**	**0060-009**	**0060-091**

Operating data		MA II 5		MA II 5	
Characteristic curve no.		405	404	405	404
Flow rate*	up to l/min.	100	190	100	190
Delivery head*	up to m wc	16	10	16	10
Viscosity**	up to mPas	700	550	700	550
Density****	up to kg/dm³	1,8	1,3	1,8	1,3
Weight (kg)	Motor + pump tube	8,3	8,3	8,3	8,3

Choice of motors	MA II 7	
Output:	795 W	795 W
Voltage:	230 V	230 V
LVR.:	no	yes
Order No.	**0060-002**	**0060-010**

Operating data		MA II 7		MA II 7	
Characteristic curve no.		407	406	407	406
Flow rate*	up to l/min.	115	210	115	210
Delivery head*	up to m wc	20	13	20	13
Viscosity**	up to mPas	500	400	500	400
Density****	up to kg/dm³	1,9	1,4	1,9	1,4
Weight (kg)	Motor + pump tube	9,5	9,5	9,5	9,5

Low-voltage release (LVR.): Prevents the pump from starting up again without warning after a power failure. It is recommended when pumping hazardous liquids.

Choice of motors	B4/GT	
Output:	750 W	750 W
Voltage:	230/400 V	230/400 V
Protection switch:	no	yes
Order No.	**0004-050**	**0004-052**

Operating data		B4/GT		B4/GT	
Characteristic curve no.		411	410	411	410
Flow rate*	up to l/min.	100	180	100	180
Delivery head*	up to m wc	12	13	12	13
Viscosity**	up to mPas	500	400	500	400
Density****	up to kg/dm³	2,2	2,0	2,2	2,0
Weight (kg)	Motor + pump tube	14,7	14,7	14,7	14,7

* Determined with water at 20 °C
** Determined with oil
*** Special lengths 200–2500 mm on request
**** Determined with 3 m hose 3/4" and open nozzle 3/4". Higher densities possible for shorter operating periods.

Special voltages and frequencies on request.

Pump tube SS PURE (stainless steel)

for aqueous and fatty foodstuffs

Materials **(coming into contact with the pumped medium):**

Version:	SL-R	SL-L	MS-FPM	MS-EPDM
Housing:	SS (1.4571)	SS (1.4571)	SS (1.4571)	SS (1.4571)
Impeller:	SS (1.4571)	PP	ETFE	ETFE
Seals:	none	none	FPM	EPDM
Mechanical seals:	none	none	Carbon, Ceramic, PTFE, SS (1.4571), HC-4 (2.4610)	Carbon, Ceramic, PTFE, SS (1.4571), HC-4 (2.4610)
Bearing:	Pure Carbon	Pure Carbon	Pure Carbon	Pure Carbon
Drive shaft:	SS (1.4571)	SS (1.4571)	SS (1.4571)	SS (1.4571)

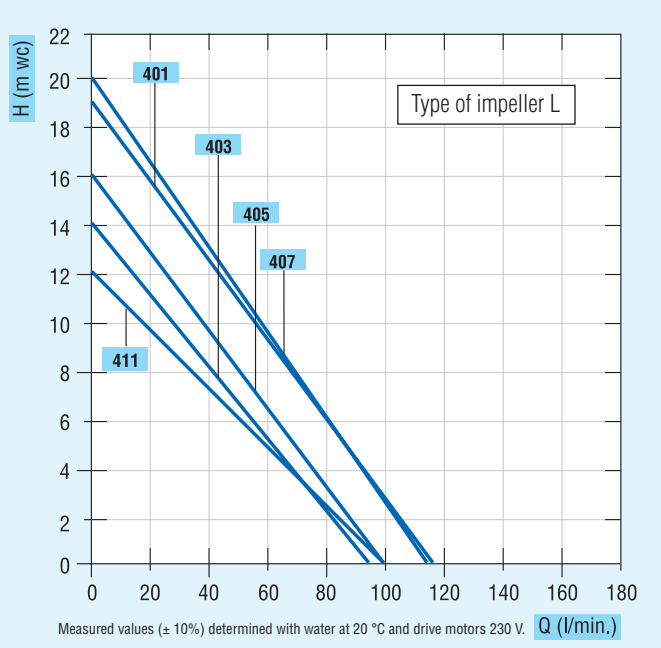

Measured values (± 10%) determined with water at 20 °C and drive motors 230 V.

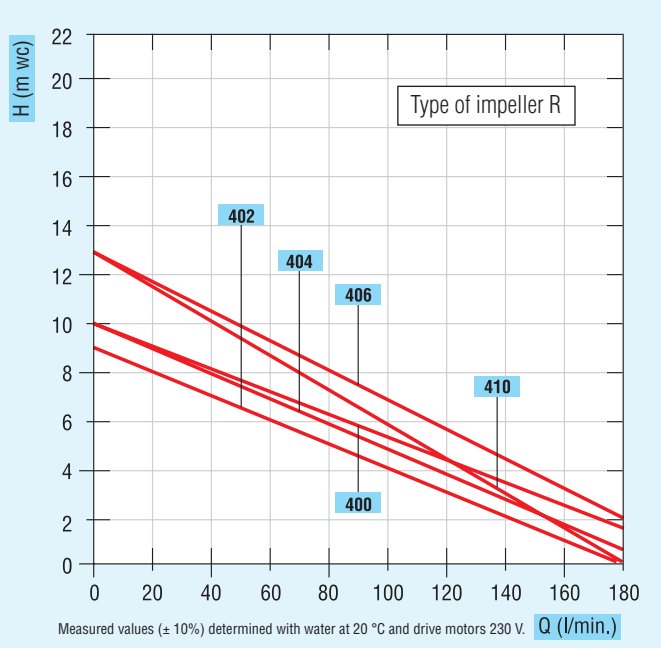

Measured values (± 10%) determined with water at 20 °C and drive motors 230 V.

Please remember that the flow rate is reduced as the **Viscosity** increases. The **Density** of the pumped liquid similarly affects the flow rate, though to a lesser extent.

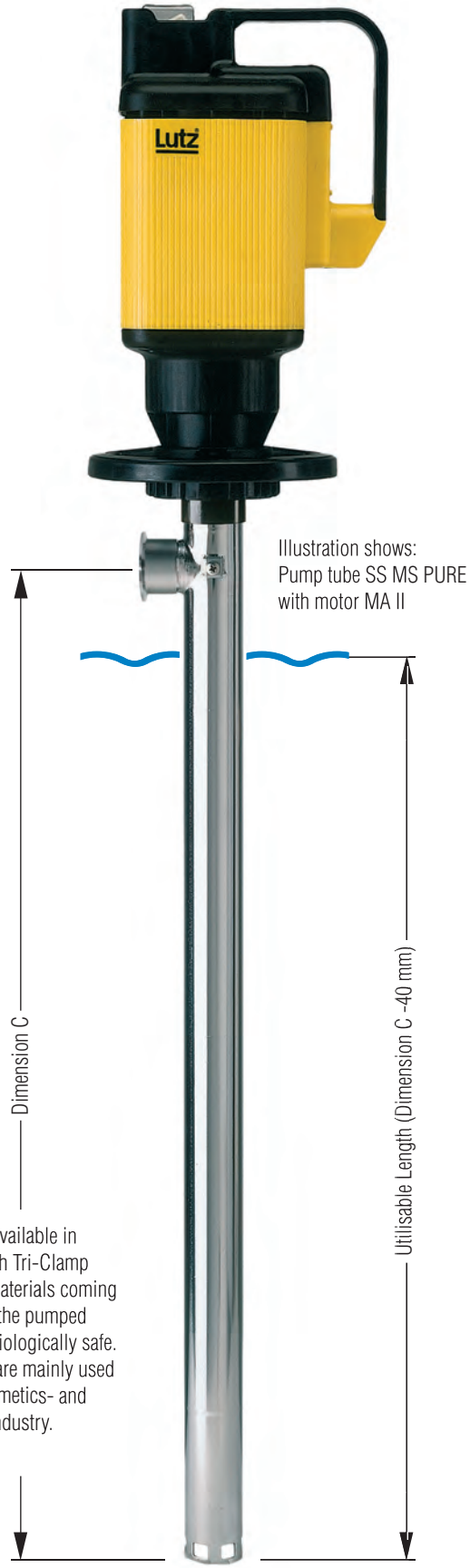

Pump tube also available in PURE version with Tri-Clamp connection. All materials coming into contact with the pumped medium are physiologically safe. The pump tubes are mainly used in the food-, cosmetics- and pharmaceutical industry.

Lutz Drum and Container Pumps

Pump tube SS PURE (stainless steel) for alcoholic, highly flammable foodstuffs

Product detail

Pump tube		SS-MS	
Type of impeller		L	R
Category 1 / 2 (acc. to ATEX)		yes	yes
Immersion tube diameter:	up to mm	41	41
Temperature of medium:	up to °C	100	100
Material:	Pump tube	1.4571	1.4571
	Impeller	ETFE	ETFE
Hose connection:	Tri-Clamp DN	32	32
Length: 700 mm*** ▲	Order No. basic pump	**0151-003**	**0151-000**
Length: 1000 mm*** ▲	Order No. basic pump	**0151-004**	**0151-001**
Length: 1200 mm*** ▲	Order No. basic pump	**0151-005**	**0151-002**
Version: PURE FPM ▲	Order No. additional price	**0151-350**	**0151-351**
Version: PURE EPDM ▲	Order No. additional price	**0151-352**	**0151-353**

▲Please choose Order-No. basic pump + Order-No. PURE additional price

Choice of motors			Operating data			
ME II 3			Characteristic curve no.		453	452
Output:	460 W	460 W	Flow rate*	up to l/min.	95	178
Voltage:	230 V	230 V	Delivery head*	up to m wc	14	9
LVR.:	yes	no	Viscosity**	up to mPas	350	200
			Density****	up to kg/dm³	1,6	1,2
Order No.	**0050-000**	**0050-016**	Weight (kg)	Motor + pump tube	8,7	8,7
ME II 5			Characteristic curve no.		455	454
Output:	580 W	580 W	Flow rate*	up to l/min.	100	190
Voltage:	230 V	230 V	Delivery head*	up to m wc	16	10
LVR.:	yes	no	Viscosity**	up to mPas	700	550
			Density****	up to kg/dm³	1,8	1,3
Order No.	**0050-001**	**0050-017**	Weight (kg)	Motor + pump tube	9,6	9,6
ME II 7			Characteristic curve no.		457	456
Output:	795 W	795 W	Flow rate*	up to l/min.	115	210
Voltage:	230 V	230 V	Delivery head*	up to m wc	20	13
LVR.:	yes	no	Viscosity**	up to mPas	500	400
			Density****	up to kg/dm³	1,9	1,4
Order No.	**0050-002**	**0050-018**	Weight (kg)	Motor + pump tube	10,8	10,8
ME II 8			Characteristic curve no.		459	458
Output:	930 W	930 W	Flow rate*	up to l/min.	123	243
Voltage:	230 V	230 V	Delivery head*	up to m wc	26	15
LVR.:	yes	no	Viscosity**	up to mPas	750	650
			Density****	up to kg/dm³	1,9	1,4
Order No.	**0050-042**	**0050-041**	Weight (kg)	Motor + pump tube	10,8	10,8

Low-voltage release (LVR):

Prevents the pump from starting up again without warning after a power failure. Compulsory for explosive areas, in case no special measures are taken (e.g. remote control).

* Determined with water at 20 °C
** Determined with oil
*** Special lengths 200–2500 mm on request
**** Determined with 3 m hose 3/4" and open nozzle 3/4". Higher densities possible for shorter operating periods.

Special voltages and frequencies on request.

Pump tube SS PURE (stainless steel)

for alcoholic, highly flammable foodstuffs

Materials **(coming into contact with the pumped medium):**

Version:	MS-FPM	MS-EPDM
Housing:	stainless steel (1.4571)	stainless steel (1.4571)
Impeller:	ETFE	ETFE
Seals:	FPM	EPDM
Mechanical seal:	Carbon, Ceramic, PTFE, stainless steel, HC-4 (2.4610)	Carbon, Ceramic, PTFE, stainless steel, HC-4 (2.4610)
Bearing:	Pure Carbon	Pure Carbon
Drive shaft:	stainless steel (1.4571)	stainless steel (1.4571)

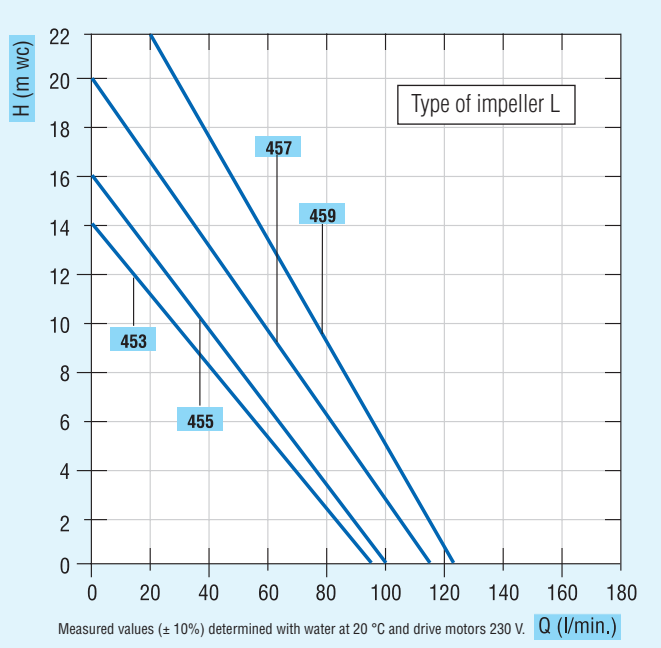

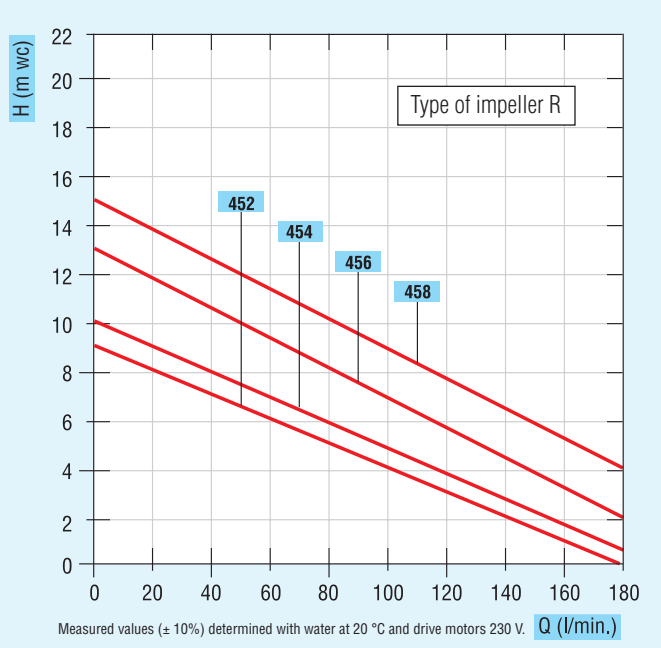

Please remember that the flow rate is reduced as the **Viscosity** increases. The **Density** of the pumped liquid similarly affects the flow rate, though to a lesser extent.

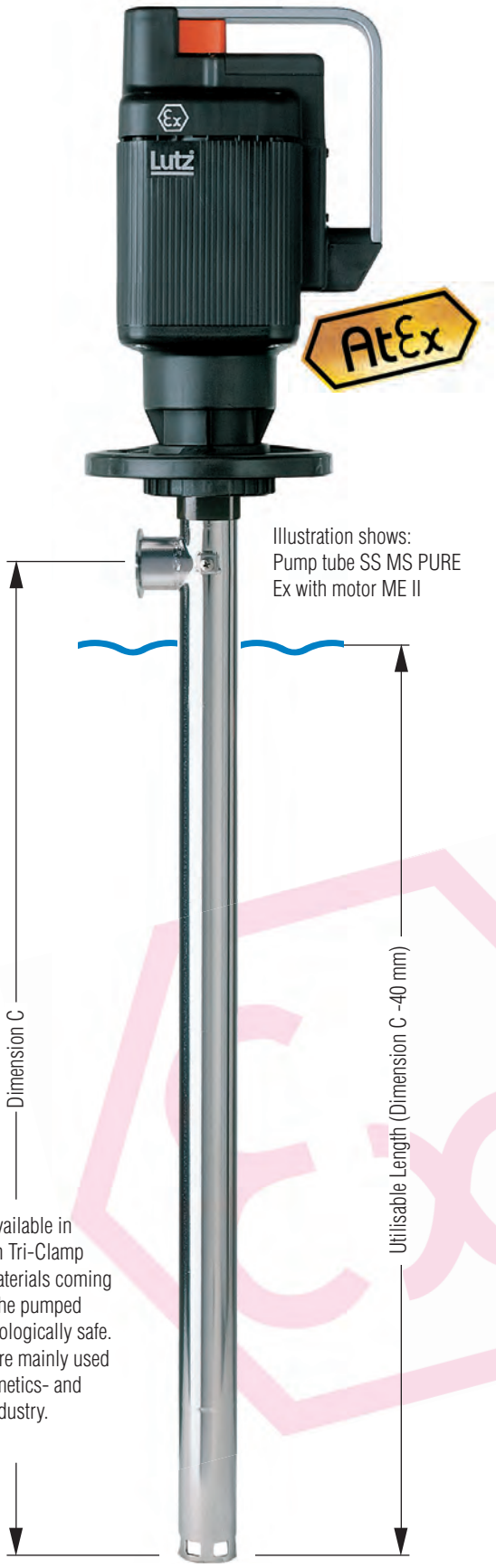

Illustration shows:
Pump tube SS MS PURE
Ex with motor ME II

Pump tube also available in PURE version with Tri-Clamp connection. All materials coming into contact with the pumped medium are physiologically safe. The pump tubes are mainly used in the food-, cosmetics- and pharmaceutical industry.

Lutz Drum and Container Pumps

Pump tube RE-SS PURE (stainless steel) for complete drum drainage of aqueous and fatty foodstuffs

Product detail

Pump tube		RE-SS-MS	
Type of impeller		L	L
Category 1 / 2 (acc. to ATEX)		no	yes
Immersion tube diameter:	up to mm	41	41
Temperature of medium:	up to °C	100	100
Material:	Pump tube Impeller	1.4571 PP	1.4571 ETFE
Hose connection:	Tri-Clamp DN	32	32
Length: 700 mm*** ▲	Order No. basic pump	**0151-156**	**0151-156**
Length: 1000 mm*** ▲	Order No. basic pump	**0151-157**	**0151-157**
Length: 1200 mm*** ▲	Order No. basic pump	**0151-158**	**0151-158**
Version: PURE FPM ▲	Order No. additional price	**–**	**0151-360**
Version: PURE EPDM ▲	Order No. additional price	**0151-361**	**0151-362**

▲Please choose Order-No. basic pump + Order-No. PURE additional price

Choice of motors / Operating data

	MI 4	MI 4-E
	-	with speed controller
Output:	500 W	500 W
Voltage:	230 V	230 V
Order No.	**0030-000**	**0030-001**

Operating data		
Characteristic curve no.		700
Flow rate*	up to l/min.	78
Delivery head*	up to m wc	17
Viscosity**	up to mPas	700
Density****	up to kg/dm³	1,4
Weight (kg)	Motor + pump tube	6,0

	MA II 3	
Output:	460 W	460 W
Voltage:	230 V	230 V
LVR.:	no	yes
Order No.	**0060-000**	**0060-008**

Operating data		
Characteristic curve no.		701
Flow rate*	up to l/min.	77
Delivery head*	up to m wc	14
Viscosity**	up to mPas	500
Density****	up to kg/dm³	1,6
Weight (kg)	Motor + pump tube	7,8

	MA II 5	MA II 5	MA II 5 S
Output:	575 W	575 W	575 W
Voltage:	230 V	230 V	230 V
LVR.:	no	yes	no acid-proof
Order No.	**0060-001**	**0060-009**	**0060-091**

Operating data		
Characteristic curve no.		702
Flow rate*	up to l/min.	77
Delivery head*	up to m wc	14
Viscosity**	up to mPas	900
Density****	up to kg/dm³	1,8
Weight (kg)	Motor + pump tube	8,6

	MA II 7	
Output:	795 W	795 W
Voltage:	230 V	230 V
LVR.:	no	yes
Order No.	**0060-002**	**0060-010**

Operating data		
Characteristic curve no.		703
Flow rate*	up to l/min.	70
Delivery head*	up to m wc	18
Viscosity**	up to mPas	700
Density****	up to kg/dm³	1,9
Weight (kg)	Motor + pump tube	9,8

Low-voltage release (LVR.): Prevents the pump from starting up again without warning after a power failure. It is recommended when pumping hazardous liquids.

	B4/GT	
Output:	750 W	750 W
Voltage:	230/400 V	230/400 V
Protection switch:	no	yes
Order No.	**0004-050**	**0004-052**

Operating data		
Characteristic curve no.		705
Flow rate*	up to l/min.	55
Delivery head*	up to m wc	8,5
Viscosity**	up to mPas	600
Density****	up to kg/dm³	2,2
Weight (kg)	Motor + pump tube	15,0

* Determined with water at 20 °C
** Determined with oil
*** Special lengths 400–2000 mm on request
**** Determined with 3 m hose 3/4" and open nozzle 3/4". Higher densities possible for shorter operating periods.

Special voltages and frequencies on request.

Pump tube RE-SS PURE (stainless steel)

for complete drum drainage of aqueous and fatty foodstuffs

Materials **(coming into contact with the pumped medium):**

Version:	MS-FPM	MS-EPDM
Housing:	stainless steel (1.4571)	stainless steel (1.4571)
Impeller:	ETFE	ETFE, optional PP
Sealing pot:	ETFE/stainless steel (1.4571)	ETFE/stainless steel (1.4571)
Seals:	FPM, PTFE	EPDM, PTFE
Mechanical seal:	Carbon, Ceramic, PTFE, HC-4 (2.4610), stainless steel 1.4571)	Carbon, Ceramic, PTFE, HC-4 (2.4610), stainless steel 1.4571)
Bearing:	Pure Carbon	Pure Carbon
Drive shaft:	stainless steel (1.4571)	stainless steel (1.4571)

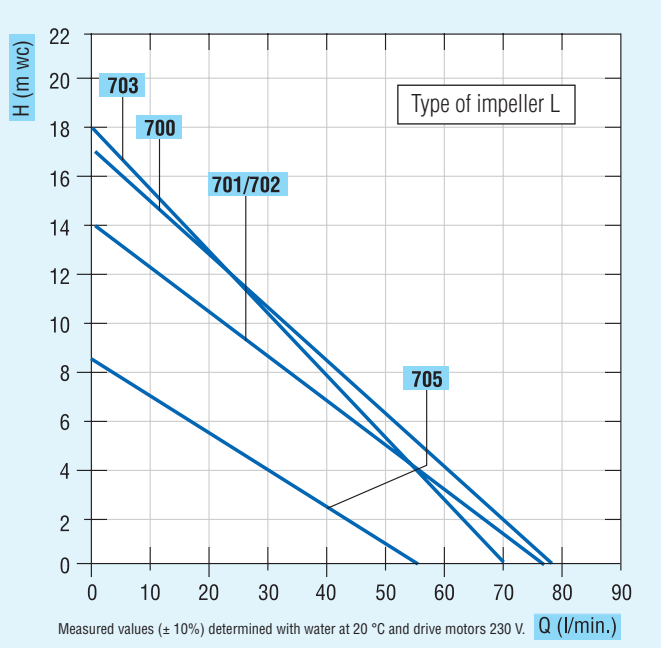

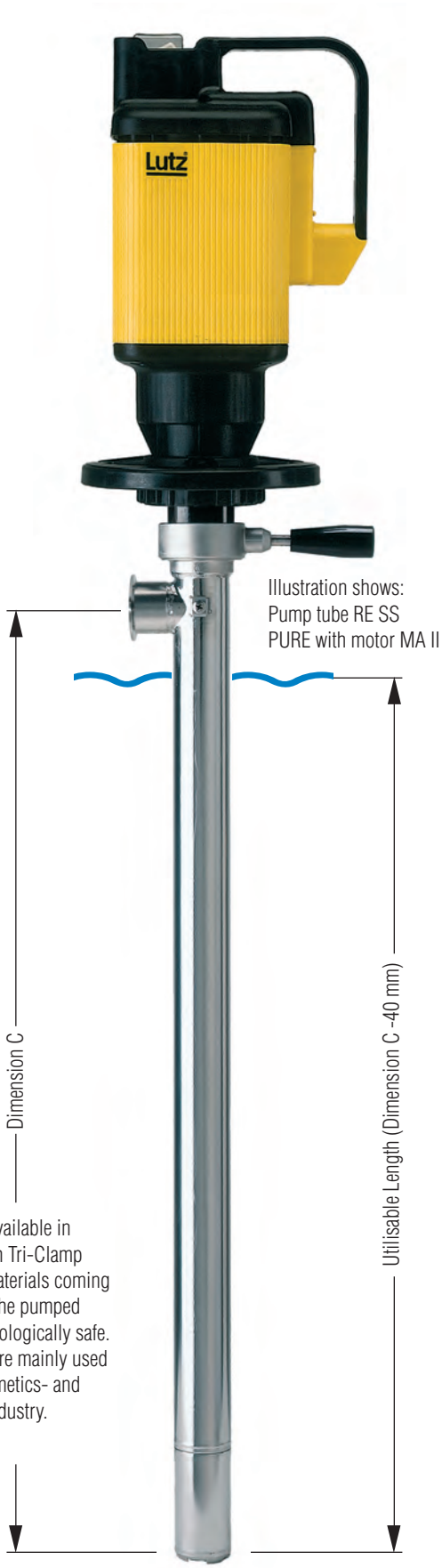

Pump tube also available in PURE version with Tri-Clamp connection. All materials coming into contact with the pumped medium are physiologically safe. The pump tubes are mainly used in the food-, cosmetics- and pharmaceutical industry.

Complete drum drainage

Nearly completely drained.
Residual quantity < 0.10 litres.

Please remember that the flow rate is reduced as the **Viscosity** increases. The **Density** of the pumped liquid similarly affects the flow rate, though to a lesser extent.

Lutz Drum and Container Pumps

Pump tube RE-SS PURE (stainless steel) for complete drum drainage of alcoholic, highly flammable foodstuffs

Product detail

Pump tube		RE-SS MS
Type of impeller		L
Category 1 / 2 (acc. to ATEX)		yes
Immersion tube diameter:	up to mm	41
Temperature of medium:	up to °C	100
Material:	Pump tube	1.4571
	Impeller	ETFE
Hose connection:	Tri-Clamp DN	32
Length: 700 mm*** ▲	Order No. basic pump	**0151-156**
Length: 1000 mm*** ▲	Order No. basic pump	**0151-157**
Length: 1200 mm*** ▲	Order No. basic pump	**0151-158**
Version: PURE FPM ▲	Order No. additional price	**0151-360**
Version: PURE EPDM ▲	Order No. additional price	**0151-362**

▲Please choose Order-No. basic pump + Order-No. PURE additional price

Choice of motors			Operating data		
	ME II 3		Characteristic curve no.		750
Output:	460 W	460 W	Flow rate*	up to l/min.	77
Voltage:	230 V	230 V	Delivery head*	up to m wc	14
LVR.:	yes	no	Viscosity**	up to mPas	500
			Density****	up to kg/dm³	1,6
Order No.	**0050-000**	**0050-016**	Weight (kg)	Motor + pump tube	9,0
	ME II 5		Characteristic curve no.		751
Output:	580 W	580 W	Flow rate*	up to l/min.	77
Voltage:	230 V	230 V	Delivery head*	up to m wc	14
LVR.:	yes	no	Viscosity**	up to mPas	900
			Density****	up to kg/dm³	1,8
Order No.	**0050-001**	**0050-017**	Weight (kg)	Motor + pump tube	9,9
	ME II 7		Characteristic curve no.		752
Output:	795 W	795 W	Flow rate*	up to l/min.	70
Voltage:	230 V	230 V	Delivery head*	up to m wc	18
LVR.:	yes	no	Viscosity**	up to mPas	700
			Density****	up to kg/dm³	1,9
Order No.	**0050-002**	**0050-018**	Weight (kg)	Motor + pump tube	11,1
	ME II 8		Characteristic curve no.		753
Output:	930 W	930 W	Flow rate*	up to l/min.	78
Voltage:	230 V	230 V	Delivery head*	up to m wc	22
LVR.:	yes	no	Viscosity**	up to mPas	950
			Density****	up to kg/dm³	1,9
Order No.	**0050-042**	**0050-041**	Weight (kg)	Motor + pump tube	11,1

Low-voltage release (LVR):

Prevents the pump from starting up again without warning after a power failure. Compulsory for explosive areas, in case no special measures are taken (e.g. remote control).

* Determined with water at 20 °C
** Determined with oil
*** Special lengths 400–2000 mm on request
**** Determined with 3 m hose 3/4" and open nozzle 3/4". Higher densities possible for shorter operating periods.

Special voltages and frequencies on request.

Pump tube RE-SS PURE (stainless steel)

for complete drum drainage of alcoholic, highly flammable foodstuffs

Materials **(coming into contact with the pumped medium):**

Version:	MS-FPM	MS-EPDM
Housing:	stainless steel (1.4571)	stainless steel (1.4571)
Impeller:	ETFE	ETFE
Sealing pot:	ETFE/stainless steel (1.4571)	ETFE/stainless steel (1.4571)
Seals:	FPM, PTFE	EPDM, PTFE
Mechanical seal:	Carbon, Ceramic, PTFE, HC-4 (2.4610), stainless steel 1.4571)	Carbon, Ceramic, PTFE, HC-4 (2.4610), stainless steel 1.4571)
Bearing:	Pure Carbon	Pure Carbon
Drive shaft:	stainless steel (1.4571)	stainless steel (1.4571)

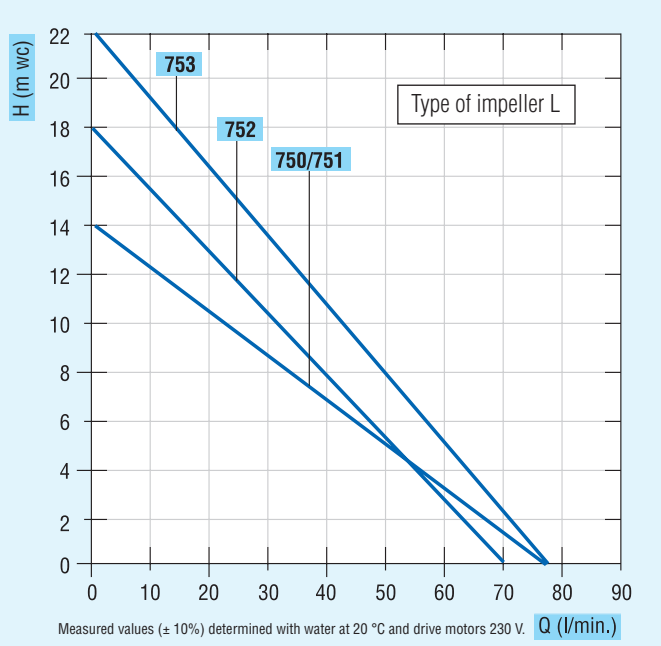

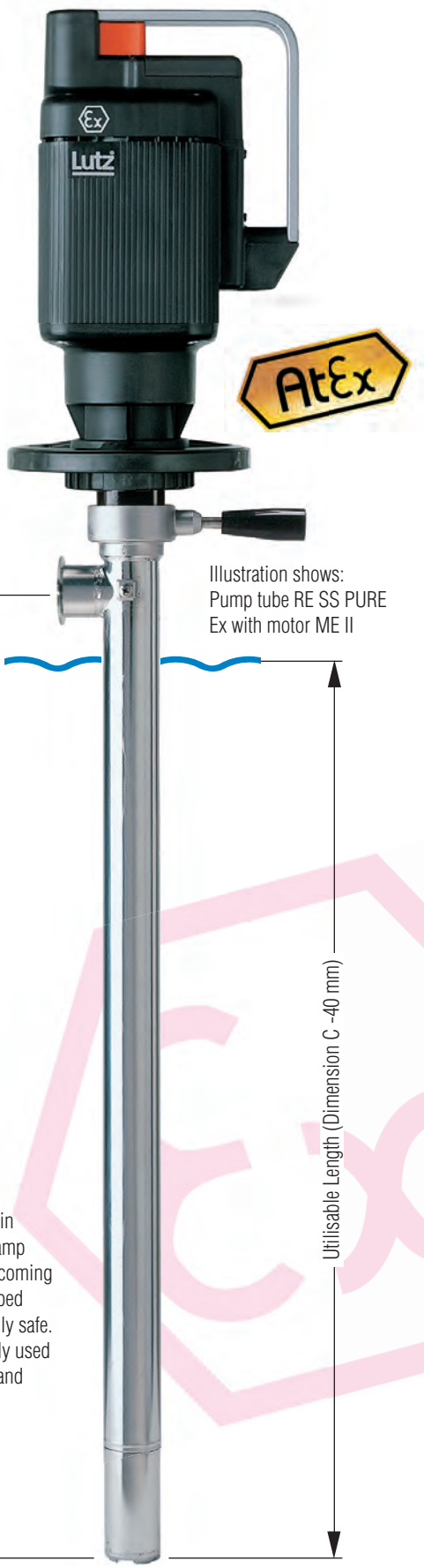

Pump tube also available in PURE version with Tri-Clamp connection. All materials coming into contact with the pumped medium are physiologically safe. The pump tubes are mainly used in the food-, cosmetics- and pharmaceutical industry.

Tip

The right pump for "hot applications".

Please remember that the flow rate is reduced as the **Viscosity** increases. The **Density** of the pumped liquid similarly affects the flow rate, though to a lesser extent.

Lutz Drum and Container Pumps

Pump tube MP-SS PURE (stainless steel) for mixing and pumping of aqueous and fatty foodstuffs

Product detail

Pump tube		MP-SS-MS	
Type of impeller		R	R
Category 1 / 2 (acc. to ATEX)		no	yes
Immersion tube diameter:	up to mm	41	41
Temperature of medium:	up to °C	100	100
Material:	Pump tube	1.4571	1.4571
	Impeller	SS	ETFE
Hose connection:	Tri-Clamp DN	32	32
Length: 1000 mm*** ▲	Order No. basic pump	**0151-240**	**0151-240**
Length: 1225 mm*** ▲	Order No. basic pump	**0151-255**	**0151-255**
Version: PURE FPM ▲	Order No. additional price	–	**0151-355**
Version: PURE EPDM ▲	Order No. additional price	**0151-356**	**0151-357**

▲Please choose Order-No. basic pump + Order-No. PURE additional price

Choice of motors

	MI 4	MI 4-E
	-	with speed controller
Output:	500 W	500 W
Voltage:	230 V	230 V
Order No.	**0030-000**	**0030-001**

	MA II 3	
Output:	460 W	460 W
Voltage:	230 V	230 V
LVR.:	no	yes
Order No.	**0060-000**	**0060-008**

	MA II 5	MA II 5	MA II 5 S
Output:	575 W	575 W	575 W
Voltage:	230 V	230 V	230 V
LVR.:	no	yes	no acid-proof
Order No.	**0060-001**	**0060-009**	**0060-091**

	MA II 7	
Output:	795 W	795 W
Voltage:	230 V	230 V
LVR.:	no	yes
Order No.	**0060-002**	**0060-010**

Low-voltage release (LVR.): Prevents the pump from starting up again without warning after a power failure. It is recommended when pumping hazardous liquids.

	B4/GT	
Output:	750 W	750 W
Voltage:	230/400 V	230/400 V
Protection switch:	no	yes
Order No.	**0004-050**	**0004-052**

Operating data

		MI 4	MI 4-E	MA II 3	MA II 5	MA II 5	MA II 5 S	MA II 7	B4/GT
Characteristic curve no.		900		901		902		903	905
Flow rate*	up to l/min.	210		178		190		210	140
Delivery head*	up to m wc	10		9		10		13	10,5
Viscosity**	up to mPas	350		200		550		400	400
Density****	up to kg/dm³	1,1		1,2		1,3		1,4	2,0
Weight (kg)	Motor + pump tube	6,0		7,8		8,6		9,8	15,0

* Determined with water at 20 °C
** Determined with oil
*** Special lengths 600–2500 mm on request
**** Determined with 3 m hose 3/4" and open nozzle 3/4". Higher densities possible for shorter operating periods.

Special voltages and frequencies on request.

Pump tube MP-SS PURE (stainless steel)

for mixing and pumping of aqueous and fatty foodstuffs

Materials **(coming into contact with the pumped medium):**

Version:	MS-FPM	MS-EPDM
Housing:	stainless steel (1.4571)	stainless steel (1.4571)
Impeller:	ETFE	ETFE optional SS
Seals:	FPM, PTFE	EPDM, PTFE
Mechanical seal:	Carbon, Ceramic, PTFE, HC-4 (2.4610), stainless steel 1.4571)	Carbon, Ceramic, PTFE, HC-4 (2.4610), stainless steel 1.4571)
Bearing:	Pure Carbon	Pure Carbon
Drive shaft:	stainless steel (1.4571)	stainless steel (1.4571)

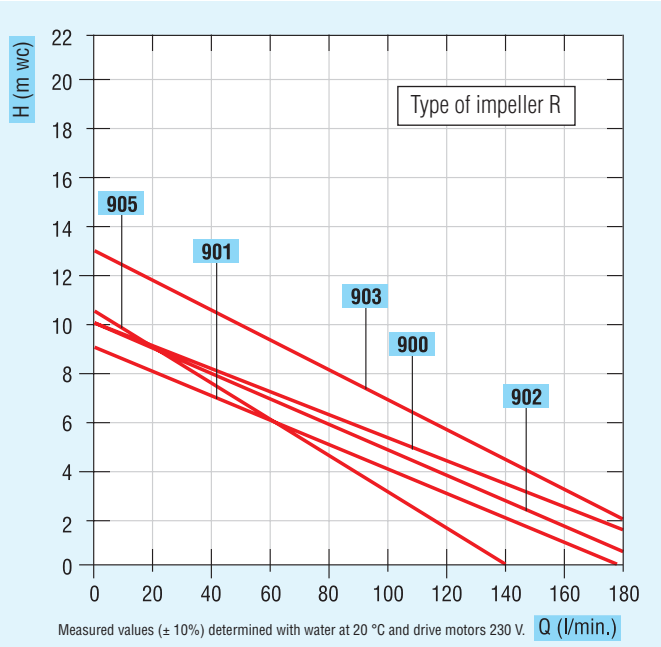

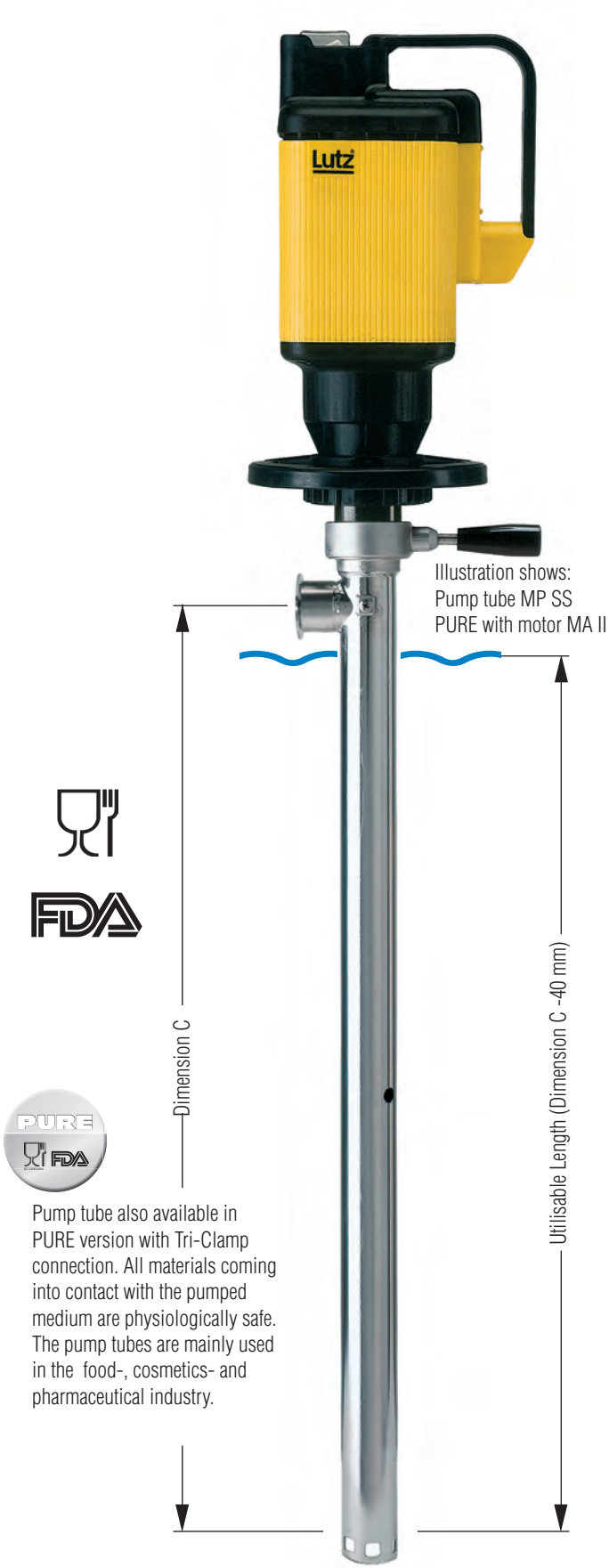

Pump tube also available in PURE version with Tri-Clamp connection. All materials coming into contact with the pumped medium are physiologically safe. The pump tubes are mainly used in the food-, cosmetics- and pharmaceutical industry.

Tip

Which pump for which liquid?
See resistance table

Please remember that the flow rate is reduced as the **Viscosity** increases. The **Density** of the pumped liquid similarly affects the flow rate, though to a lesser extent.

Lutz Drum and Container Pumps

Pump tube MP-SS PURE (stainless steel) for mixing and pumping of alcoholic, highly flammable foodstuffs

Product detail

Pump tube		MP-SS MS
Type of impeller		R
Category 1 / 2 (acc. to ATEX)		yes
Immersion tube diameter:	up to mm	41
Temperature of medium:	up to °C	100
Material:	Pump tube	1.4571
	Impeller	ETFE
Hose connection:	Tri-Clamp DN	32
Length: 1000 mm*** ▲	Order No. basic pump	**0151-240**
Length: 1225 mm*** ▲	Order No. basic pump	**0151-255**
Version: PURE FPM ▲	Order No. additional price	**0151-355**
Version: PURE EPDM ▲	Order No. additional price	**0151-357**

▲Please choose Order-No. basic pump + Order-No. PURE add tional price

Choice of motors			Operating data		
ME II 3			Characteristic curve no.		950
Output:	460 W	460 W	Flow rate*	up to l/min.	178
Voltage:	230 V	230 V	Delivery head*	up to m wc	9
LVR.:	yes	no	Viscosity**	up to mPas	200
			Density****	up to kg/dm³	1,2
Order No.	**0050-000**	**0050-016**	Weight (kg)	Motor + pump tube	9,0
ME II 5			Characteristic curve no.		951
Output:	580 W	580 W	Flow rate*	up to l/min.	190
Voltage:	230 V	230 V	Delivery head*	up to m wc	10
LVR.:	yes	no	Viscosity**	up to mPas	550
			Density****	up to kg/dm³	1,3
Order No.	**0050-001**	**0050-017**	Weight (kg)	Motor + pump tube	9,9
ME II 7			Characteristic curve no.		952
Output:	795 W	795 W	Flow rate*	up to l/min.	210
Voltage:	230 V	230 V	Delivery head*	up to m wc	13
LVR.:	yes	no	Viscosity**	up to mPas	400
			Density****	up to kg/dm³	1,4
Order No.	**0050-002**	**0050-018**	Weight (kg)	Motor + pump tube	11,1
ME II 8			Characteristic curve no.		953
Output:	930 W	930 W	Flow rate*	up to l/min.	216
Voltage:	230 V	230 V	Delivery head*	up to m wc	14,5
LVR.:	yes	no	Viscosity**	up to mPas	650
			Density****	up to kg/dm³	1,4
Order No.	**0050-042**	**0050-041**	Weight (kg)	Motor + pump tube	11,1

Low-voltage release (LVR):

Prevents the pump from starting up again without warning after a power failure. Compulsory for explosive areas, in case no special measures are taken (e.g. remote control).

* Determined with water at 20 °C
** Determined with oil
*** Special lengths 600–2500 mm on request
**** Determined with 3 m hose 3/4" and open nozzle 3/4". Higher densities possible for shorter operating periods.

Special voltages and frequencies on request.

Pump tube MP-SS PURE (stainless steel)

for mixing and pumping of alcoholic, highly flammable foodstuffs

Materials **(coming into contact with the pumped medium):**

Version:	MS-FPM	MS-EPDM
Housing:	stainless steel (1.4571)	stainless steel (1.4571)
Impeller:	ETFE	ETFE
Seals:	FPM, PTFE	EPDM, PTFE
Mechanical seal:	Carbon, Ceramic, PTFE, HC-4 (2.4610), stainless steel 1.4571)	Carbon, Ceramic, PTFE, HC-4 (2.4610), stainless steel 1.4571)
Bearing:	Pure Carbon	Pure Carbon
Drive shaft:	stainless steel (1.4571)	stainless steel (1.4571)

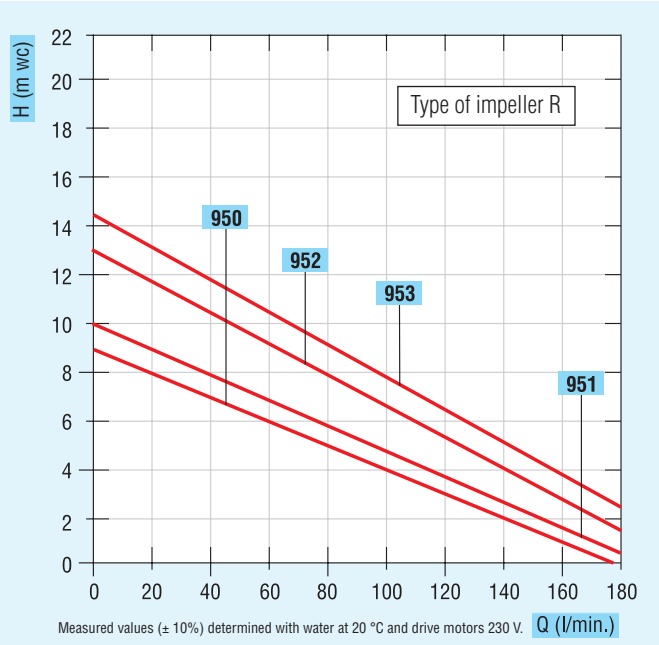

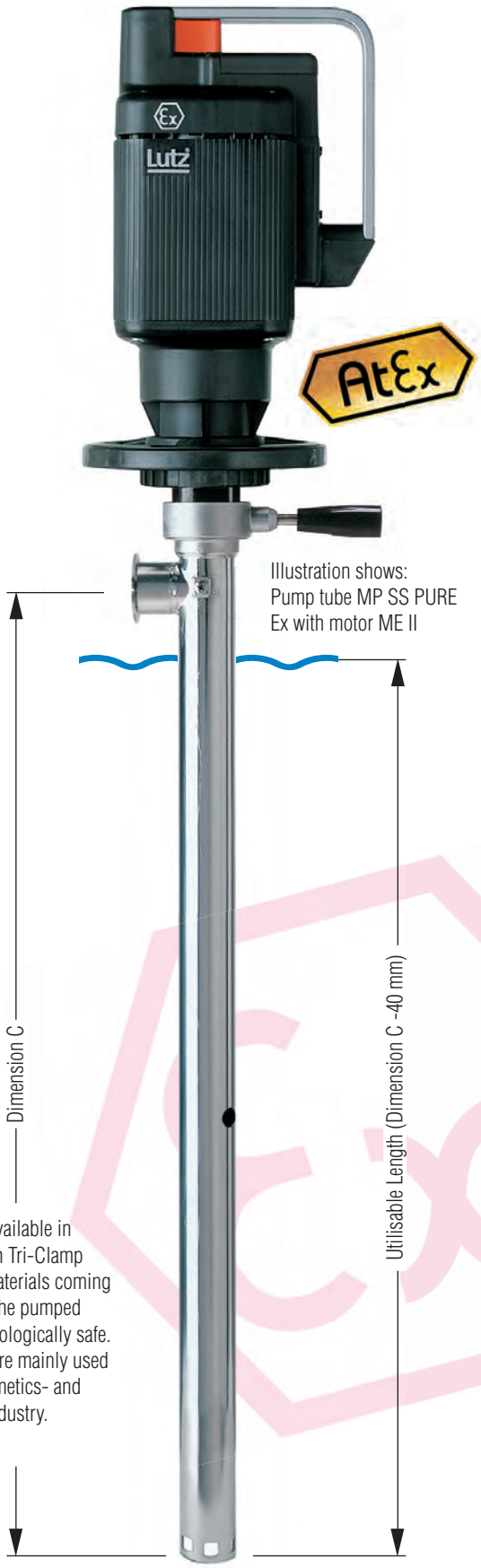

Illustration shows:
Pump tube MP SS PURE
Ex with motor ME II

Pump tube also available in PURE version with Tri-Clamp connection. All materials coming into contact with the pumped medium are physiologically safe. The pump tubes are mainly used in the food-, cosmetics- and pharmaceutical industry.

Please remember that the flow rate is reduced as the **Viscosity** increases. The **Density** of the pumped liquid similarly affects the flow rate, though to a lesser extent.

Lutz Eccentric Screw Pumps in PURE Version

Lutz Eccentric Screw Pumps
HD-E SS in PURE Version

The Lutz HD-E combines the advantages of a handy drum pump and the gentle operation of a robust eccentric screw pump. Ideal for pumping viscous raw materials and food products.

- + Ideal for slightly to moderately viscous liquids
- + Gentle product pumping
- + Quiet operation
- + Easy handling
- + Simple cleaning without tools
- + Not filled with lubricants, preventing product contamination

PURE FDA

Properties:

- Displacement pump using the eccentric screw principle
  Materials in contact with liquids in food quality
- Low pulsation, even pumping flow
- Practically no abrasive effect on the medium
- Compact dimensions
- Easily detachable outer pipe
- High-performance single-phase 230 V/ 50 Hz motor

Lutz Eccentric Screw Pumps
B70V PURE in PURE Version

Lutz B70V PURE series eccentric screw pumps are well-suited for liquids which are highly viscous or susceptible to abrasion, as well as liquids with and without fibre or solid content. Quiet-running, low-wear three-phase drives, or reduction gear and universal drive for mobile use.

- For liquids susceptible to abrasion or highly viscous liquids
- Gentle product pumping
- Variable flow rate (in conjunction with speed controller / frequency converter)
- Easy handling
- Quick-action motor coupling enables the motor and pump tube to be connected and separated quickly
- Quick to dismantle, easy to clean
- Not filled with lubricants, preventing product contamination

PURE FDA

Properties:

- Displacement pump using the eccentric screw principle
- Materials in contact with liquids in food quality
- Low pulsation, even pumping flow
- Practically no abrasive effect on the medium
- Easily detachable outer pipe
- For mobile and stationary use
- Optionally available with integrated frequency converter

Lutz Eccentric Screw Pumps

Lutz HD-E PURE for medium viscous foodstuffs

The intelligent solution for the pumping of medium viscosity liquids

High efficiency, handy, low weight and easily disassembled for easy cleaning make the Lutz HD-E a practical drum pump system especially for medium viscosity liquids.
It is suitable for pumping acids and basic liquids, oils, used oil, waste disposal liquids, colours, foodstuffs, cosmetics and creams.

- ✓ Light and compact
- ✓ Simple and easily dismantled
- ✓ Easy to clean
- ✓ Suitable for continuous operation
- ✓ Practical Lutz hand wheel for motor separation and to carry
- ✓ Smooth flow
- ✓ For thin and thick liquids
- ✓ Constant volumetric flow

Product detail

Pump tube		HD-E PURE
Category 1 / 2 (acc. to ATEX)		no
Immersion tube diameter:	max. mm	41
Temperature of medium:	max. °C	100
Material:	Pump tube Stator	Stainless steel (1.4571) PTFE
Hose connection:	Tri-Clamp DN	32
Length: 1000 mm ▲*	Order-No. basic pump	**0155-010**
Version PURE FPM ▲	Order-No. additional price	**0155-016**
Version PURE EPDM ▲	Order-No. additional price	**0155-017**

▲Please choose Order-No. basic pump + Order-No. PURE additional price

Choice of motors		Operating data		
Single phase motor				
Output:	0,55 kW	Delivery rate	up to l/min.	20
Voltage:	230 V	Delivery head	up to bar	4
Speed:	1500 1/min.	Viscosity	mPas	500-4000
Protection class:	IP 54	Weight (kg)	Motor + pump tube	11,5
Order-No.	**0155-032**			

* Special lengths 600–1500 mm on request

HD-E PURE

for viscosities from 500 to 4000 mPas

Materials (coming into contact with the pumped medium)

Version:	HD-E PURE FPM	HD-E PURE EPDM
Pump tube:	Stainless steel (1.4571)	Stainless steel (1.4571)
Stator:	PTFE	PTFE
Mechanical seal:	Stainless steel/Carbon/FPM	Stainless steel/Carbon/EPDM
Secondary seal:	FPM	EPDM
Drive shaft:	Stainless steel (1.4571)	Stainless steel (1.4571)

Pump tube in PURE version also available with Tri-Clamp-connection. All materials coming into contact with the pumped medium are physiologically safe. The pump tubes are mainly used in the food-, cosmetics- and pharmaceutical industry.

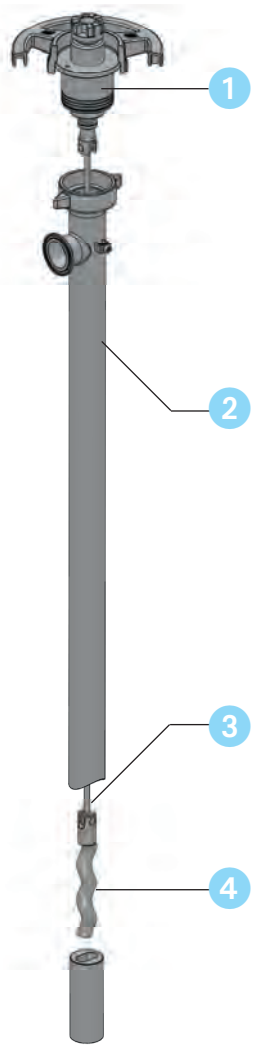

1 Bearing head with mechanical seal
- Compact unit for bearing and bearing shaft
- Wide range of mechanical seals

2 Easy detachable pump tube
- Easy cleaning
- No tools for disassembling of pump

3 Free running drive shaft
- Easy to clean

4 Delivery element eccentric
- Smooth pumping of liquids
- High pressure
- Constant volumetric flow

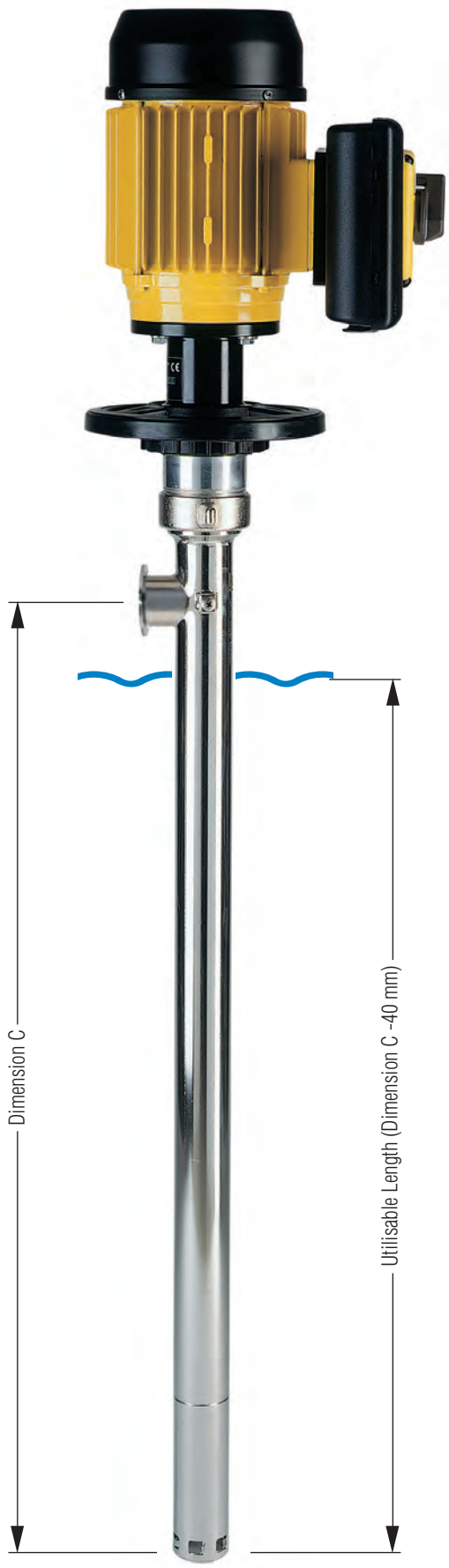

Lutz Eccentric Screw Pumps

B70V-SR 12.1, 25.1 and 50.1 PURE for viscous foodstuffs

Product detail

Pump tubes		B70V-SR PURE					
Size		12.1	12.1	25.1	25.1	50.1	50.1
Category 1 / 2 (acc. to ATEX)		no	yes	no	yes	no	yes
Seal	Packing gland (St) Mechanical seal (MS)	MS	MS	MS	MS	MS	MS
Drive shaft	Torsion shaft (TS) Universal joint shaft (UJ)	TS	UJ	TS	UJ	TS	UJ
Delivery rate*	up to l/min.	12	12	25	25	50	50
Delivery head*	up to bar	6	6	6	6	6	6
Temp. of medium**	max. °C	140	140	140	140	140	140
Material pump tube		1.4571/1.4404	1.4571/1.4404	1.4571/1.4404	1.4571/1.4404	1.4571/1.4404	1.4571/1.4404
Material stator		PTFE	PTFE	PTFE	PTFE	PTFE	PTFE
Immersion tube diameter	mm	54	54	54	54	54	54
Pressure joint	Tri-Clamp DN	50	50	50	50	50	50
Weight	kg	7	7	7	7	7	7
Length***	mm	1000	1000	1000	1000	1100	1100
Order-No. basic pump ▲		**0174-014**	**0174-024** ●	**0174-134**	**0174-144** ●	**0174-514**	**0174-524** ●
Order-No. additional price PURE FPM ▲		**0172-128**	**0173-138** ●	**0172-128**	**0173-138** ●	**0172-128**	**0173-138** ●
Order-No. additional price PURE EPDM ▲		**0172-129**	**0173-139** ●	**0172-129**	**0173-139** ●	**0172-129**	**0173-139** ●

▲Please choose Order-No. basic pump + Order-No. PURE additional price

* Determined with water at 20 °C, three-phase motor (900 rpm) and elastomer stator
** with PTFE Stator (the medium temperature of explosion proof eccentric screw pumps B70 may not exceed 100°C)
*** Special length 500 - 2000 mm on request (version with joint shaft only)

● Explosion proof eccentric screw pump approved category 1 / 2 (acc. to ATEX)
for pumping flammable liquids of the explosion group IIA and temperature class T4

Choice of motors

Universal motors non-ex. proof	MI 4	MI 4-E	MA II 3	MA II 5	MA II 7
Type	500 W, 230 V	500 W, 230 V	460 W, 230 V	575 W, 230 V	795 W, 230 V
Protection class/Weight	IP 24 2,8 kg ohne Drehzahlst.	IP 24 2,8 kg mit Drehzahlst.	IP 54 4,6 kg	IP 54 5,4 kg	IP 54 6,6 kg
Order-No. (without low-voltage release)	**0030-000**	**0030-001**	**0060-000**	**0060-001**	**0060-002**
Order-No. (with low-voltage release)	**–**	**–**	**0060-008**	**0060-009**	**0060-010**

Universal motors ex. proof	ME II 3	ME II 5	ME II 7	ME II 8
Type	460 W, 230 V	580 W, 230 V	795 W, 230 V	930 W, 230 V
Protection class/Weight	IP 54 5,5 kg	IP 54 6,3 kg	IP 54 7,5 kg	IP 54 8 kg
Order-No. (with low-voltage release)	**0050-000**	**0050-001**	**0050-002**	**0050-042**
Order-No. (without low-voltage release)	**0050-016**	**0050-017**	**0050-018**	**0050-041**

B70V-SR 12.1, 25.1 and 50.1 PURE

for viscosities from 1 - 30,000 mPas

Materials **(coming into contact with the pumped medium):**

Version:	B70V-SR PURE PTFE/FPM	B70V-SR PURE PTFE/EPDM
Housing:	Stainless steel (1.4571/1.4404)	Stainless steel (1.4571/1.4404)
Rotor:	Stainless steel (1.4571)	Stainless steel (1.4571)
Seals:	FPM	EPDM
Mechanical seal: Torsion shaft Universal joint shaft	 WC/SiC/FPM WC/WC/FPM	 WC/SiC/EPDM WC/WC/EPDM
Drive shaft:	Stainless steel (1.4571)	Stainless steel (1.4571)
Stator material:	PTFE	PTFE

Pump tube with PTFE stator, also available in PURE version with Tri-Clamp-connection. The pump tubes are mainly used in the food-, cosmetics- and pharmaceutical industry.

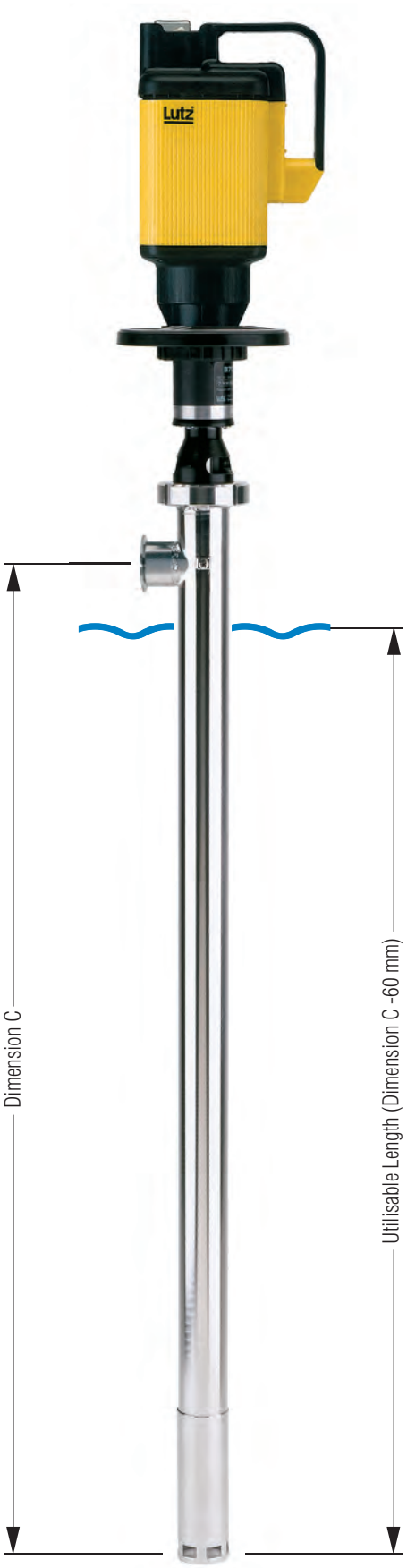

Important Information!

When pumping in „Zone 0“ areas or pumping flammable liquids only pumps with mechanical seal, universal joint shaft and PTFE stator are approved.

Viscosity range from aqueous to fluidity range.
Medium table with liquid examples see chemical resistance table.

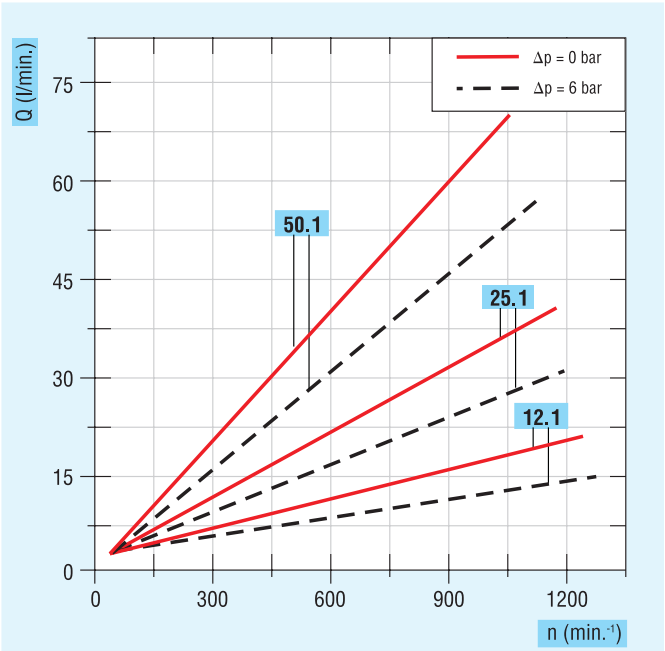

Lutz Eccentric Screw Pumps

B70V 12.1 and 25.1 PURE for viscous foodstuffs

Product detail

Pump tubes		B70V PURE			
Size		**12.1**	**12.1**	**25.1**	**25.1**
Category 1 / 2 (acc. to ATEX)		no	yes	no	yes
Seal	Mechanical seal (MS)	MS	MS	MS	MS
Drive shaft	Torsion shaft (TS) Universal joint shaft (UJ)	TS	UJ	TS	UJ
Delivery rate*	up to l/min.	12	12	25	25
Delivery head*	up to bar	6	6	6	6
Temp. of medium**	max. °C	140	140	140	140
Material pump tube		1.4571/1.4404	1.4571/1.4404	1.4571/1.4404	1.4571/1.4404
Material stator		PTFE	PTFE	PTFE	PTFE
Immersion tube diameter	mm	54	54	54	54
Pressure joint	Tri-Clamp DN	50	50	50	50
Weight	kg	7	7	7	7
Length***	mm	1000	1000	1000	1000
Order-No. basic pump ▲		**0172-004**	**0173-014** ●	**0172-124**	**0173-134** ●
Order-No. additional price PURE FPM ▲		**0172-128**	**0173-138** ●	**0172-128**	**0173-138** ●
Order-No. additional price PURE EPDM ▲		**0172-129**	**0173-139** ●	**0172-129**	**0173-139** ●

▲Please choose Order-No. basic pump + Order-No. PURE additional price

* Determined with water at 20 °C, three-phase motor (900 rpm) and elastomer stator
** with PTFE Stator (the medium temperature of explosion proof eccentric screw pumps B70 may not exceed 100°C)
*** Special length 500 - 2000 mm on request (version with joint shaft only)

● Explosion proof eccentric screw pump approved category 1 / 2 (acc. to ATEX)
for pumping flammable liquids of the explosion group IIA and temperature class T4

Choice of motors

Three-phase motor 230/400 V, 50 Hz,

Energy efficiency class IE 3 in accordance with EU regulations 640/2009 and 04/2014

Special voltages, frequencies, protection classes as well as higher explosion proof protection classes on request.

Motors with cable terminal box	For B70V - 12.1		For B70V - 25.1	
Type	0,37 kW, 700 1/min.	0,55 kW, 900 1/min.	0,55 kW, 700 1/min.	0,75 kW, 900 1/min.
Protection class/Weight	IP 55 16 kg	IP 55 12 kg	IP 55 16 kg	IP 55 22 kg
Order-No.	**0172+803**	**0172+806**	**0172+809**	**0172-901**

Motors with protection switch	For B70V - 12.1		For B70V - 25.1	
Type	0,37 kW, 700 1/min.	0,55 kW, 900 1/min.	0,55 kW, 700 1/min.	0,75 kW, 900 1/min.
Protection class/Weight	IP 54 16 kg	IP 54 12 kg	IP 54 16 kg	IP 54 22 kg
Order-No.	**0172+802**	**0172+805**	**0172+808**	**0172-900**

Motors, explosion proof	For B70V - 12.1		For B70V - 25.1	
Type	0,37 kW, 700 1/min.	0,55 kW, 900 1/min.	0,55 kW, 700 1/min.	0,65 kW, 900 1/min.
Type of protection	II 2 G Ex e II T3	II 2 G Ex e II T3	II 2 G Ex e II T3	II 2 G Ex e II T3
Protection class/Weight	IP 55 19 kg	IP 55 17 kg	IP 55 22 kg	IP 55 20 kg
Order-No.	**0172-801**	**0172-804**	**0172-807**	**0172-810**

Motors with frequency converter	For B70V - 12.1	For B70V - 25.1	
Type	0,55 kW, 0-900 1/min.	0,55 kW, 0-900 1/min.	0,75 kW, 0-900 1/min.
Protection class/Weight	IP 55 16 kg	IP 55 16 kg	IP 55 22 kg
Order-No.	**0172-769**	**0172-769**	**0172-768**

B70V 12.1 and 25.1 PURE

for viscosities from 1 - 100,000 mPas

Materials **(coming into contact with the pumped medium):**

Version:	B70V PURE PTFE/FPM	B70V PURE PTFE/EPDM
Housing:	Stainless steel (1.4571/1.4404)	Stainless steel (1.4571/1.4404)
Rotor:	Stainless steel (1.4571)	Stainless steel (1.4571)
Seals:	FPM	EPDM
Mechanical seal: Torsion shaft Universal joint shaft	 WC/SiC/FPM WC/WC/FPM	 WC/SiC/EPDM WC/WC/EPDM
Drive shaft:	Stainless steel (1.4571)	Stainless steel (1.4571)
Stator material:	PTFE	PTFE

Pump tube with PTFE stator, also available in PURE version with Tri-Clamp-connection. The pump tubes are mainly used in the food-, cosmetics- and pharmaceutical industry.

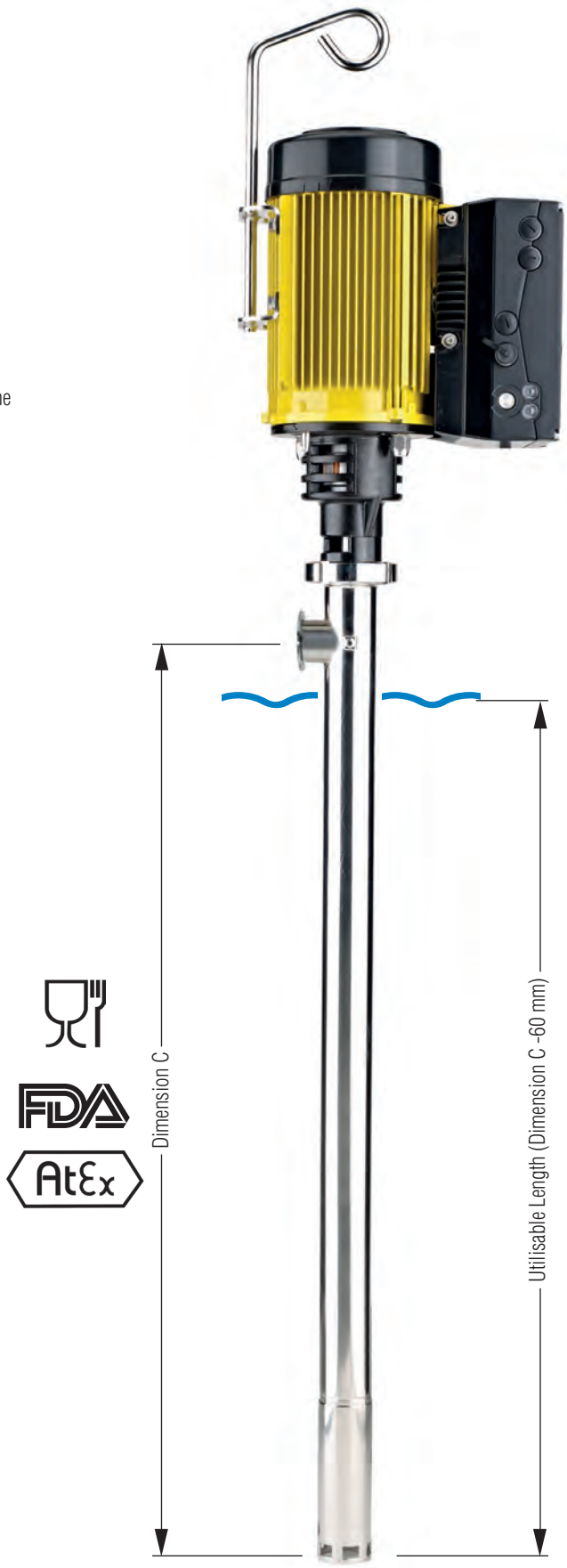

Important Information!

When pumping in „Zone 0“ areas or pumping flammable liquids only pumps with mechanical seal, universal joint shaft and PTFE stator are approved.

Viscosity range from aqueous to fluidity range.
Medium table with liquid examples see chemical resistance table.

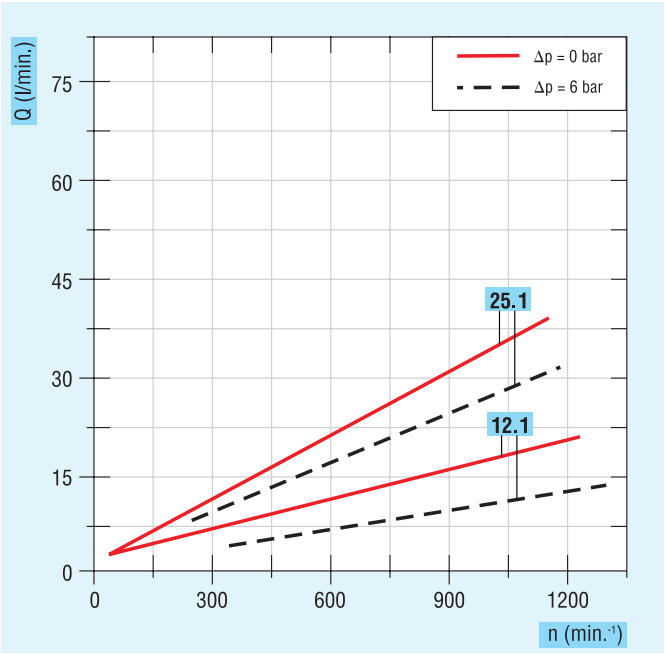

Lutz Eccentric Screw Pumps

B70V 25.2 PURE for viscous foodstuffs

Product detail

Pump tubes		B70V PURE	
Size		**25.2**	**25.2**
Category 1 / 2 (acc. to ATEX)		no	yes
Seal	Packing gland (St) Mechanical seal (MS)	MS	MS
Drive shaft	Torsion shaft (TS) Universal joint shaft (UJ)	TS	UJ
Delivery rate*	up to l/min.	25	25
Delivery head*	up to bar	10	10
Temp. of medium**	max. °C	140	140
Material pump tube		1.4571/1.4404	1.4571/1.4404
Material stator		PTFE	PTFE
Immersion tube diameter	mm	54	54
Pressure joint	Tri-Clamp DN	50	50
Weight	kg	7	7
Length***	mm	1100	1100
Order-No. basic pump ▲		**0172-254**	**0173-264** ●
Order-No. additional price PURE FPM ▲		**0172-128**	**0173-138** ●
Order-No. additional price PURE EPDM ▲		**0172-129**	**0173-139** ●

▲Please choose Order-No. basic pump + Order-No. PURE additional price

* Determined with water at 20 °C, three-phase motor (900 rpm) and elastomer stator
** with PTFE Stator (the medium temperature of explosion proof eccentric screw pumps B70 may not exceed 100°C)
*** Special length 500 - 2000 mm on request (version with joint shaft only)

● Explosion proof eccentric screw pump approved category 1 / 2 (acc. to ATEX)
for pumping flammable liquids of the explosion group IIA and temperature class T4

Choice of motors

Three-phase motor 230/400 V, 50 Hz,

Energy efficiency class IE 3 in accordance with EU regulations 640/2009 and 04/2014

Special voltages, frequencies, protection classes as well as higher explosion proof protection classes on request.

Motors with cable terminal box	For B70V - 25.2	
Type	0,75 kW, 700 1/min.	1,1 kW, 900 1/min.
Protection class/Weight	IP 55 18 kg	IP 55 34 kg
Order-No.	**0172+815**	**0172-903**

Motors with protection switch	For B70V - 25.2	
Type	0,75 kW, 700 1/min.	1,1 kW, 900 1/min.
Protection class/Weight	IP 54 18 kg	IP 54 34 kg
Order-No.	**0172+814**	**0172-902**

Motors, explosion proof	For B70V - 25.2	
Type	0,65 kW, 700 1/min.	1,0 kW, 900 1/min.
Type of protection	II 2 G Ex e II T3	II 2 G Ex e II T3
Protection class/Weight	IP 55 27 kg	IP 55 23 kg
Order-No.	**0172-813**	**0172-816**

Motors with frequency converter	For B70V - 25.2
Type	1,1 kW, 0-900 1/min.
Protection class/Weight	IP 55 25 kg
Order-No.	**0172-767**

B70V 25.2 PURE

for viscosities from 1 - 100,000 mPas

Materials **(coming into contact with the pumped medium):**

Version:	B70V PURE PTFE/FPM	B70V PURE PTFE/EPDM
Housing:	Stainless steel (1.4571/1.4404)	Stainless steel (1.4571/1.4404)
Rotor:	Stainless steel (1.4571)	Stainless steel (1.4571)
Seals:	FPM	FPM or EPDM
Mechanical seal: Torsion shaft Universal joint shaft	 WC/SiC/FPM WC/WC/FPM	 WC/SiC/EPDM WC/WC/EPDM
Drive shaft:	Stainless steel (1.4571)	Stainless steel (1.4571)
Stator material:	PTFE	PTFE

Pump tube with PTFE stator, also available in PURE version with Tri-Clamp-connection. The pump tubes are mainly used in the food-, cosmetics- and pharmaceutical industry.

Important Information!

When pumping in „Zone 0“ areas or pumping flammable liquids only pumps with mechanical seal, universal joint shaft and PTFE stator are approved.

Viscosity range from aqueous to fluidity range.
Medium table with liquid examples see chemical resistance table.

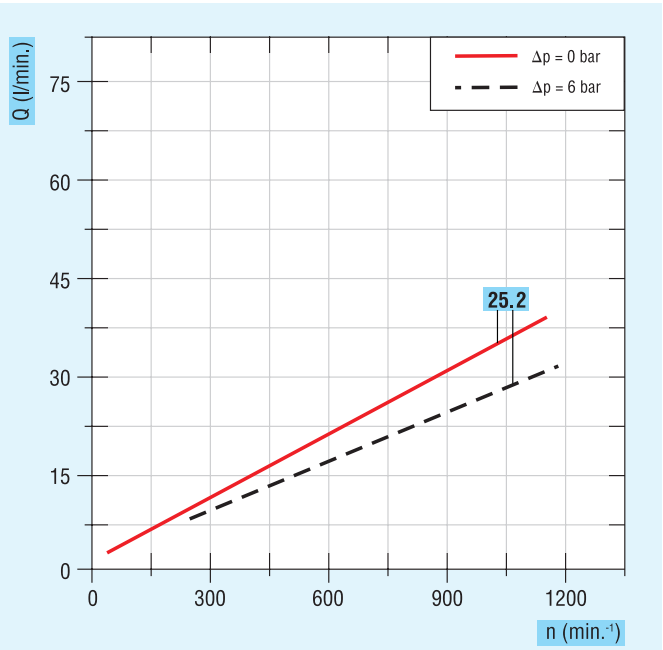

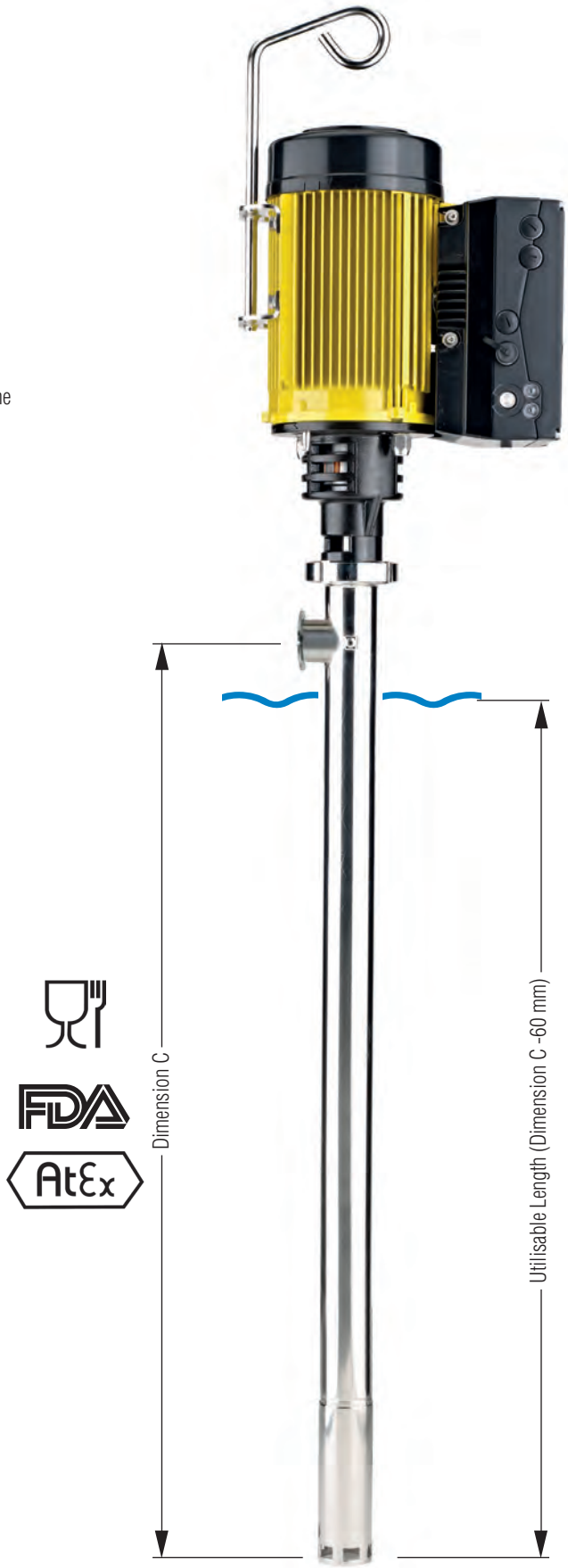

Lutz Eccentric Screw Pumps

B70V 50.1 and 75.1 PURE for viscous foodstuffs

Product detail

Pump tubes		B70V PURE		
Size		**50.1**	**50.1**	**75.1**
Category 1 / 2 (acc. to ATEX)		no	yes	no
Seal	Packing gland (St) Mechanical seal (MS)	MS	MS	MS
Drive shaft	Torsion shaft (TS) Universal joint shaft (UJ)	TS	UJ	UJ
Delivery rate*	up to l/min.	50	50	75
Delivery head*	up to bar	6	6	6
Temp. of medium**	max. °C	140	140	140
Material pump tube		1.4571/1.4404	1.4571/1.4404	1.4571/1.4404
Material stator		PTFE	PTFE	PTFE
Immersion tube diameter	mm	54	54	54
Pressure joint	Tri-Clamp DN	50	50	50
Weight	kg	7	7	7
Length***	mm	1100	1100	1100
Order-No. basic pump ▲		**0172-504**	**0173-514** ●	**0173-564**
Order-No. additional price PURE FPM ▲		**0172-128**	**0173-138** ●	**0173-140**
Order-No. additional price PURE EPDM ▲		**0172-129**	**0173-139** ●	**0173-141**

▲ Please choose Order-No. basic pump + Order-No. PURE additional price

* Determined with water at 20 °C, three-phase motor (900 rpm) and elastomer stator

** with PTFE Stator (the medium temperature of explosion proof eccentric screw pumps B70 may not exceed 100°C)

*** Special length 500 - 2000 mm on request (version with joint shaft only)

● Explosion proof eccentric screw pump approved category 1 / 2 (acc. to ATEX)
for pumping flammable liquids of the explosion group IIA and temperature class T4

Choice of motors

Three-phase motor 230/400 V, 50 Hz,

Energy efficiency class IE 3 in accordance with EU regulations 640/2009 and 04/2014

Special voltages, frequencies, protection classes as well as higher explosion proof protection classes on request.

Motors with cable terminal box	For B70V - 50.1		
Type Protection class/Weight	1,1 kW, 700 1/min. IP 55 22 kg	1,1 kW, 900 1/min. IP 55 34 kg	
Order-No.	**0172+826**	**0172-903**	

Motors with cable terminal box	For B70V - 75.1		
Type Protection class/Weight	1,1 kW, 700 1/min. IP 55 22 kg	1,5 kW, 700 1/min. IP 55 34 kg	1,5 kW, 900 1/min. IP 55 34 kg
Order-No.	**0172+826**	**0172-761**	**0172-905**

Motors with protection switch	For B70V - 50.1		
Type Protection class/Weight	1,1 kW, 700 1/min. IP 54 22 kg	1,1 kW, 900 1/min. IP 54 34 kg	
Order-No.	**0172+825**	**0172-902**	

Motors with protection switch	For B70V - 75.1		
Type Protection class/Weight	1,1 kW, 700 1/min. IP 54 22 kg	1,5 kW, 700 1/min. IP 54 34 kg	1,5 kW, 900 1/min. IP 54 34 kg
Order-No.	**0172+825**	**0172-760**	**0172-904**

Motors, explosion proof	For B70V - 50.1		
Type Type of protection Protection class/Weight	0,65 kW, 700 1/min. II 2 G Ex e II T3 IP 55 27 kg	1,0 kW, 900 1/min. II 2 G Ex e II T3 IP 55 23 kg	
Order-No.	**0172-813**	**0172-816**	

Motors with frequency converter	For B70V - 50.1	For B70V - 75.1
Version Protection class/Weight	1,1 kW, 0-900 1/min. IP 55 25 kg	1,5 kW, 0-900 1/min. IP 55 37 kg
Order-No.	**0172-767**	**0172-766**

B70V 50.1 and 75.1 PURE

for viscosities from 1 - 100,000 mPas

Materials **(coming into contact with the pumped medium):**

Version:	B70V PURE PTFE/FPM	B70V PURE PTFE/EPDM
Housing:	Stainless steel (1.4571/1.4404)	Stainless steel (1.4571/1.4404)
Rotor:	Stainless steel (1.4571)	Stainless steel (1.4571)
Seals:	FPM	EPDM
Mechanical seal: Torsion shaft Universal joint shaft	 WC/SiC/FPM WC/WC/FPM	 WC/SiC/EPDM WC/WC/EPDM
Drive shaft:	Stainless steel (1.4571)	Stainless steel (1.4571)
Stator material:	PTFE	PTFE

Pump tube with PTFE stator, also available in PURE version with Tri-Clamp-connection. The pump tubes are mainly used in the food-, cosmetics- and pharmaceutical industry.

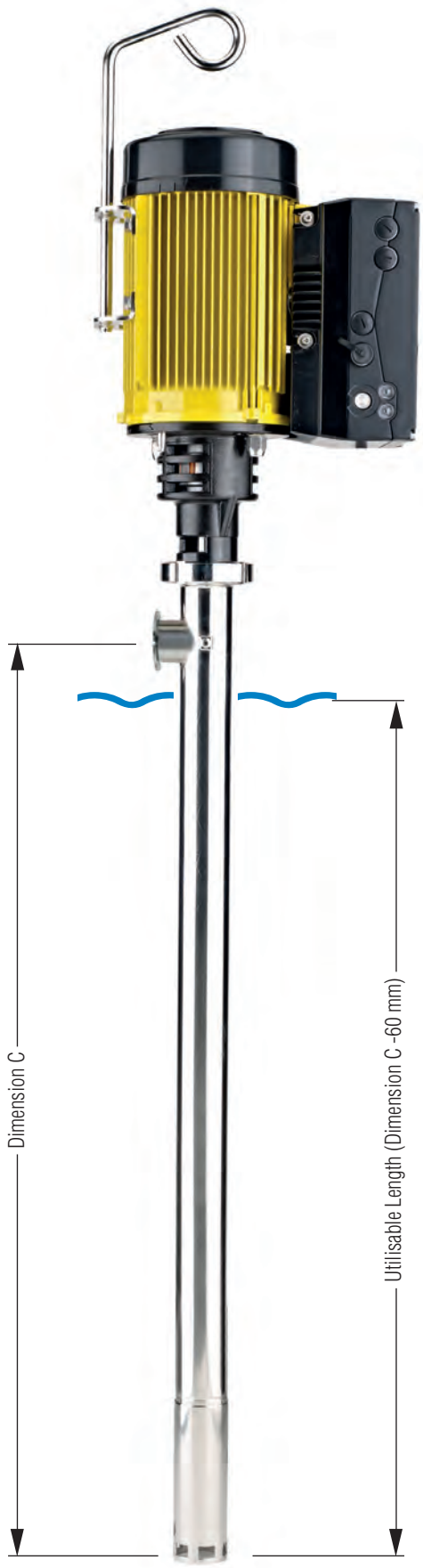

Important Information!

When pumping in „Zone 0“ areas or pumping flammable liquids only pumps with mechanical seal, universal joint shaft and PTFE stator are approved.

Viscosity range from aqueous to fluidity range.
Medium table with liquid examples see chemical resistance table.

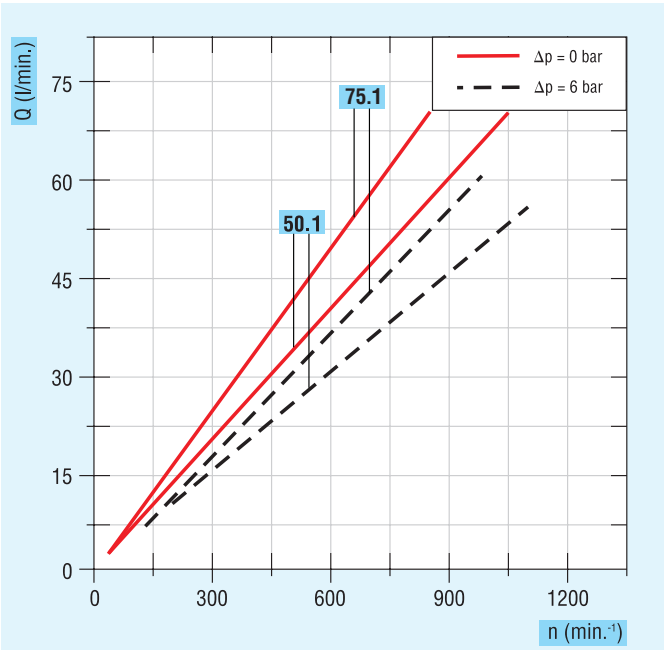

Lutz Eccentric Screw Pumps

B70V 120.1 PURE for viscous and pasty foodstuffs

Product detail

Pump tubes		B70V PURE
Size		**120.1**
Category 1 / 2 (acc. to ATEX)		no
Seal	Mechanical seal (MS)	MS
Drive shaft	Universal joint shaft (UJ)	UJ
Delivery rate*	up to l/min.	120
Delivery head*	up to bar	6
Temp. of medium	max. °C	140
Material pump tube		1.4571
Material stator		PTFE
Pumpendurchmesser**	max. mm	131
Pressure joint	Tri Clamp DN	50
Weight	kg	21
Length***	mm	1100
Order-No. basic pump ▲		**0175-204**

Order-No. additional price PURE FPM ▲	**0175-208**
Order-No. additional price PURE EPDM ▲	**0175-209**

▲Please choose Order-No. basic pump + Order-No. PURE additional price

* Determined with water at 20 °C, three-phase motor (600 rpm and 700 rpm) and elastomer stator
** required bunghole ∅ 133 mm
*** Special length 500 - 2000 mm on request

Choice of motors

Motors with cable terminal box	For B70V - 120.1	
Type Protection class/Weight	2,2 kW, 600 1/min. IP 55 42 kg	3,0 kW, 600 1/min. IP 55 47 kg
Order-No.	**0175-802**	**0175-803**

Motors with frequency converter	For B70V - 120.1
Version Protection class/Weight	3,0 kW, 0-600 1/min. IP 55 45 kg
Order-No.	**0175+802**

Three-phase motors 230/400 V, 50 Hz,
Energy efficiency class IE 3 in accordance with EU regulations 640/2009 and 04/2014
Special voltages, frequencies, protection class on request.

B70V 120.1 PURE

for viscosities from 1 - 120.000 mPas

Materials **(coming into contact with the pumped medium):**

Version:	B70V PURE PTFE/FPM	B70V PURE PTFE/EPDM
Housing:	Stainless steel (1.4571)	Stainless steel (1.4571)
Rotor:	Stainless steel (1.4571)	Stainless steel (1.4571)
Seals:	FPM	EPDM
Mechanical seal:*	WC/WC, FPM	WC/WC, EPDM
Drive shaft:	Stainless steel (1.4571)	Stainless steel (1.4571)
Stator material:	PTFE	PTFE

* Mechanical seal pairing on request.

Pump tube with PTFE stator, also available in PURE version with Tri-Clamp-connection. The pump tubes are mainly used in the food-, cosmetics- and pharmaceutical industry.

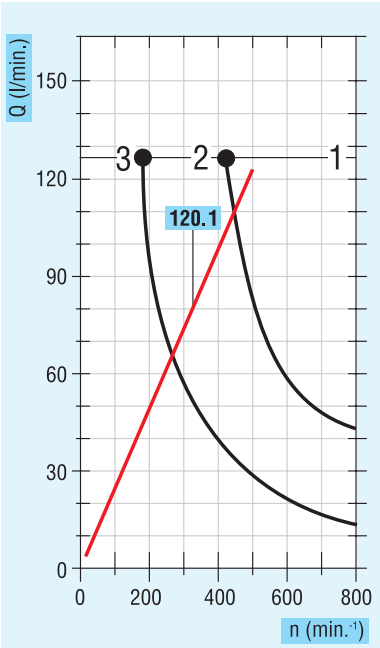

Range 1:

Thin-bodied and lubricating fluids such as wine, milk, oils etc.
$\eta < 7000$ mPas

Range 2:

Abrasive and viscous fluids such as pulps, adhesives, paints, inks, etc.
$\eta < 20{,}000$ mPas

Range 3:

Very abrasive and highly viscous fluids such as honey, greases, syrups, etc.
$\eta > 20{,}000$ mPas

Viscosity range:

Up to limit of flowabilty

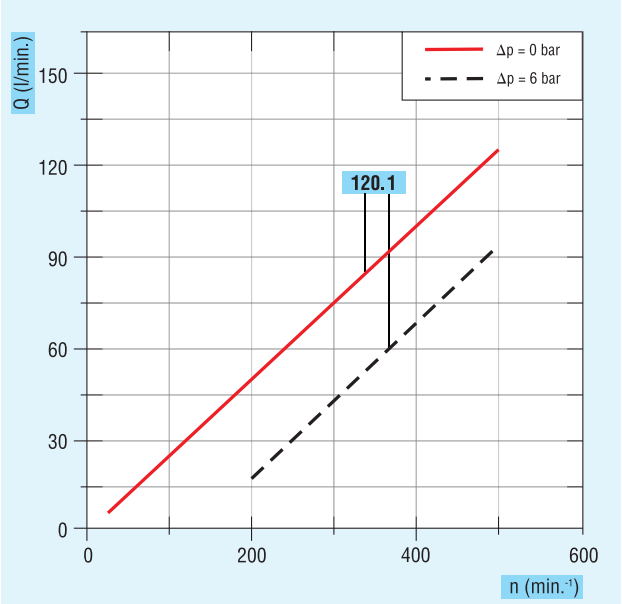

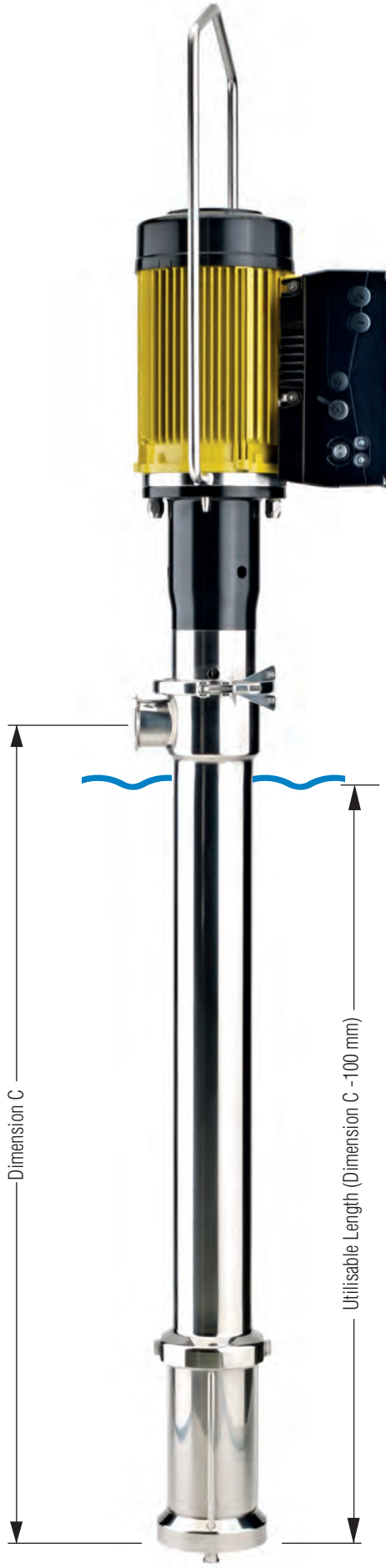

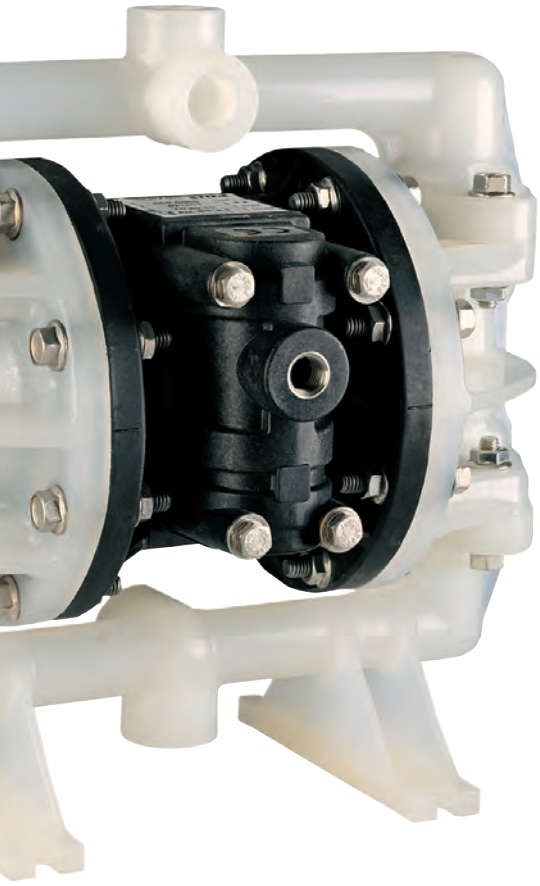

FDA-conform Double Diaphragm Pump

DMP 1/2”-1” Made of Plastic

In order to ensure a reliable filling process, the hoses, nozzles and curved spouts meet the requirements of the food and beverage industry.

PURE FDA

Other accessories for food and beverages

In order to ensure a reliable filling process, the hoses, nozzles and curved spouts meet the requirements of the food and beverage industry.

FDA

AtEx

Certified Quality

All materials used have been tested and conform to the required standards.
Our high quality standards are certified by a declaration of conformity.

Manufacturer's Declaration / EC Declaration of Conformity

Lutz Pumpen GmbH

Lutz Flow Meter

TS VA10 SS in PURE Version

The VA10 SS PURE flow measurement device with touch screen display and backlighting is very impressive thanks to its simple, practical display and user-friendly operation, multi-language interface and compact construction. The user guide with instructions
in plain text, system reporting and assistance texts as well as safety and monitoring functions virtually eliminate the possibility of
errors. It can also be operated manually or by external control.

- + Precise volume detection of liquid food products and raw materials
- + Practical display and user-friendly operation
- + User-error protection
- + High measurement precision thanks to overrun correction
- + Simple calibration
- + Easy installation and starting up
- + External control / data evaluation via standard interfaces

Properties:

- Operates via nutating disc
- Materials in contact with liquids in food quality
- Touch screen display
- Multi-language menu guide
- Instructions in plain text
- Integrated assistance function
- Safety and monitoring functions
- With and without volume preselection
- “Plug & Play” module concept
- Explosion-proof versions approved in accordance with the ATEX Directive 2014/34/EU Category 1/2

Volume preset

A relay module which can be integrated into the metering system automatically shuts off the pump motor and/or solenoid valve once the volume preset has been reached.

Flow measurement without volume preselection - TS

for aqueous, fatty and highly flammable foodstuffs

Flow meters type VA10 in PURE-version are optionally available for the food-, cosmetics and pharmaceutical industry.

Technical data		Typ VA10 PURE	Typ VA10 Ex PURE
Range of use		aqueous and fatty foodstuffs	highly flammable foodstuffs
Flow volume	l/min.	min. 10 – max. 100	min. 10 – max. 100
Temperature	°C	80	60
Viscosity	mPas	5.000	5.000
Operating pressure	bar	10	10
Accuracy		± 1%	± 1%
Inlet and Outlet port		Tri-Clamp DN 32	Tri-Clamp DN 32
LCD display		Touch-Screen 63x63 mm, 128x128 pixels, sub-total volume can be reset	
Menu language		DE, GB, ES, FR, IT, NL, PT, RU	
Materials: Housing Measuring chamber Seals Magnet		 Stainless steel (1.4581/1.4571)* Steinless steel (1.4581/1.4571) PTFE/PVDF FEP PVDF encapsulated	 Stainless steel (1.4581/1.4571)* Steinless steel (1.4581/1.4571) PTFE/PVDF/PE FEP PVDF encapsulated
Type of protection: Operating unit Basic flow meter		 – –	 II 2 G Ex ib IIB T4** II 2 G T4
Protection class		IP 55	IP 55
Weight	kg	3,7	3,7
Order-No. basic flow meter▲		**0231-049**	**0231-040 ●**

* Special materials on request General information to the chemical resistance of the different flow meters you will find in our chemical resistance list.
** Protection class II 2 G Ex ib IIC T4 on request.

Order-No. PURE additional price	0230-330	0230-331

▲Please choose Order-No. basic flow meter + Order-No. PURE additional price

Recommended Accessories: Power supply unit NG10***		
Voltage	V	220-240
Frequency	Hz	50-60
Order-No.		**0230-230**

*** Limited battery operation without power supply unit possible.

● Suitable for transferring combustible and easy flammable liquids (e.g. ethanol, petrol) or in explosive hazard area.

Flow measurement with volume preselection - TS

for aqueous, fatty and highly flammable foodstuffs

Flow meters type VA10 in PURE-version are optionally available for the food-, cosmetics and pharmaceutical industry.

Technical data		Typ VA10/RM10 PURE	Typ VA10/Ex-RM10dK PURE
Range of use		aqueous and fatty foodstuffs	highly flammable foodstuffs
Flow volume	l/min.	min. 10 – max. 100	min. 10 – max. 100
Temperature	°C	80	40
Viscosity	mPas	5.000	5.000
Operating pressure	bar	10	10
Accuracy		± 1%	± 1%
Inlet and Outlet port		Tri-Clamp DN 32	Tri-Clamp DN 32
LCD display		Touch-Screen 63x63 mm, 128x128 pixels, sub-total volume can be reset	
Menu language		DE, GB, ES, FR, IT, NL, PT, RU	
Materials: Housing Measuring chamber Seals Magnet		 Stainless steel (1.4581/1.4571)* Stainless steel (1.4581/1.4571) PTFE/PVDF FEP PVDF encapsulated	 Stainless steel (1.4581/1.4571)* Stainless steel (1.4581/1.4571) PTFE/PVDF/PE FEP PVDF encapsulated
Type of protection: Operating unit Basic flow meter		 – –	 II 2 G Ex ib IIB T4** AtEx II 2 G T4
Protection class		IP 55	IP 55
Weight	kg	4,1	6,7
Relay module		**RM10 230 V**	**Ex-RM10dK 230 V**
Voltage	V	220-240	220-240
Frequecy	Hz	50-60	50-60
Switching outputs		2 NO (potentially bound)	2 NO (potentially bound)
Outpump 1 (pump)		8 A, cosφ > 0,7	8 A, cosφ > 0,7
Output 2 (valve)		0,5 A	0,5 A
Type of protction		–	II 2 G Ex de [ib Gb] IIC T6 Gb
Order-No. basic flow meter▲		**0231-041**	**0231-040 ● + 0230-251 ●**

* Special materials on request General information to the chemical resistance of the different flow meters you will find in our chemical resistance list.
** Protection class II 2 G Ex ib IIC T4 on request.

Order-No. PURE additional price▲	**0230-330**	**0230-331**

▲Please choose Order-No. basic flow meter + Order-No. PURE additional price

Accessories

Accessories at a glance

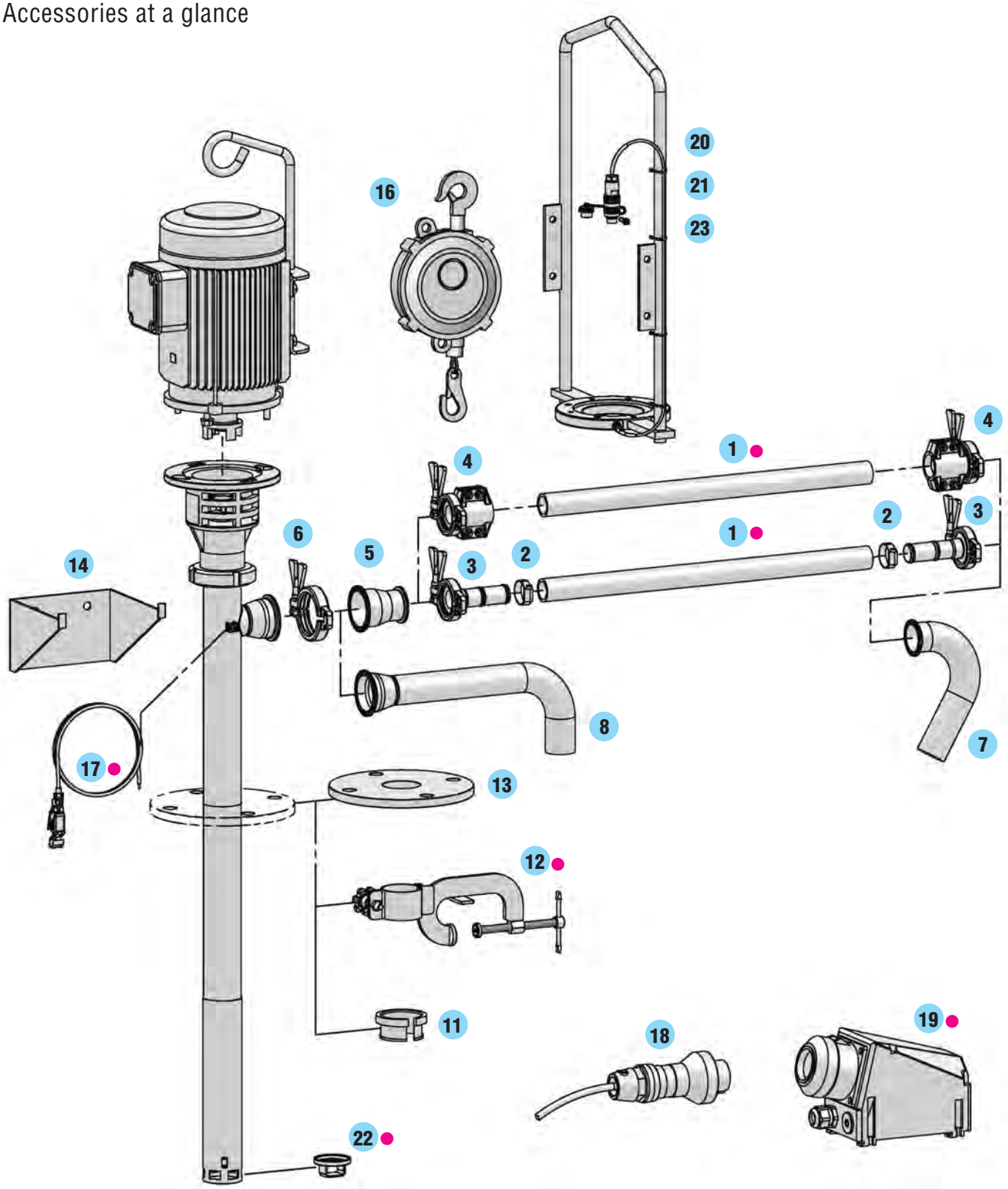

1 ● Hose	8 ● Discharge spout	18 ● Ex-plug
2 Hose clamp	11 Drum adapter	19 ● Ex-socket
3 Hose connection	12 Clamping device	20 ● Lifting device
4 Hose connector	13 Installation flange	21 Impulse transmitter
5 Tri-Clamp reducing piece	14 Wall bracket	22 ● Protection device for drum inliner
6 Tri-Clamp locking clamp	16 ● Balancer	23 ● Operating unit
7 ● Discharge spout	17 Equipotential bonding cable	

● Suitable for transferring combustible and easy flammable liquids (e.g. ethanol, petrol) or in explosive hazard area.

Specification		Order-No.	Product detail

1 PVC spiral hose

Hose for food liquids made of PVC with woven layer and embedded galvanized steel spiral, smooth interior and exterior, complies with EU Regulation 1935/2004 EG.

Operating pressure:	max. 14 bar	
Temp. of medium:	-5 °C up to +65 °C	
Nominal diameter:	Weight:	
DN 25 (1”)	0,67 kg/m	**0374-467**
DN 32 (1 1/4”)	0,80 kg/m	**0374-468**
DN 38 (1 1/2”)	1,15 kg/m	**0374-469**
DN 50 (2”)	1,60 kg/m	**0374-470**

1 Food chemical hose

Colour coding: “blue/white/blue”.
Suitable for 95% of all customary industrial chemicals such as almost all acids and alkalis, mineral oil products and solvents of all kinds. Ideal for food and luxury foodstuffs, pharmaceuticals, cosmetics and hygiene products, complies with EU Regulation EC 1935/2004 and EC 10/2011, FDA and ATEX requirements.
Foodstuff conformity of inner layer.
Internal finish: UPE light with spiraled OHM conductive stripes UPE black, smooth, non-bleeding, abrasion-resistant.
Intermediate layer: EPDM conductive
External finish: EPDM light grey, conductive, non-bleeding, ozone- and UV resistant, hardly flammable, Type Ω/T smaller than 10^6 Ohm (acc. to DIN EN 12115:2011).

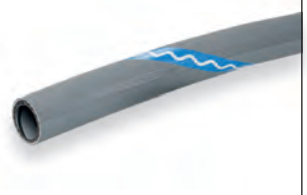

Operating pressure:	up to 16 bar	
Temperature of medium:	-30 up to +100 °C can be sterilized at 130°C for 30 minutes (open system)	
Nominal diameter:	Weight:	
DN 25 (1”)	0,8 kg/m	**0374-476** ●
DN 32 (1 1/4”)	0,9 kg/m	**0374-477** ●
DN 38 (1 1/2”)	1,2 kg/m	**0374-478** ●
DN 50 (2”)	1,9 kg/m	**0374-479** ●

2 Stepless 1-ear hose clamp

1-ear hose clamp of stainless steel for the safe fixing of different hoses onto the hose connection.

for Tri-Clamp 0204-872 / PVC spiral hose DN 25, fabric reinforced	**0300-446**
for Tri-Clamp 0204-872 / Food chemical hose DN 25	**0300-442**
for Tri-Clamp 0204-874 / PVC spiral hose DN 32, fabric reinforced	**0300-453**
for Tri-Clamp 0204-874 / Food chemical hose DN 32	**0300-460**
for Tri-Clamp 0204-876 / PVC spiral hose DN 38, fabric reinforced	**0300-465**
for Tri-Clamp 0204-876 / Food chemical hose DN 38	**0300-465**
for Tri-Clamp 0204-872 / PVC spiral hose DN 50, fabric reinforced	**0300-473**
for Tri-Clamp 0204-872 / Food chemical hose DN 50	**0300-477**

● Suitable for transferring combustible and easy flammable liquids (e.g. ethanol, petrol) or in explosive hazard area.

Accessories

For B70V SanitaryPlus and B70 PURE

Product detail	Specification	Order-No.

Caution:
The assembler is responsible for the professional bonding of the hose according to the current Pressure Equipment Directive.

3 Hose connection with Tri-Clamp

For connection of the hose onto the eccentric screw pump B70, discharge spout or Tri-clamp armatures (consisting of hose connector, locking clamp and seal)
Material: Stainless steel (1.4404)

Connection:	for hose with nominal diameter:	Seal:	
Tri-Clamp DN 32**	DN 19 (3/4")	EPDM	**0204-870**
Tri-Clamp DN 32**	DN 19 (3/4")	FPM	**0204-871**
Tri-Clamp DN 32**	DN 25 (1")	EPDM	**0204-872**
Tri-Clamp DN 32**	DN 25 (1")	FPM	**0204-873**
Tri-Clamp DN 32**	DN 32 (1 1/4")	EPDM	**0204-874**
Tri-Clamp DN 32**	DN 32 (1 1/4")	FPM	**0204-875**
Tri-Clamp DN 32**	DN 38 (1 1/2")	EPDM	**0204-876**
Tri-Clamp DN 32**	DN 38 (1 1/2")	FPM	**0204-877**
Tri-Clamp DN 50	DN 38 (1 1/2")	EPDM	**0172-746**
Tri-Clamp DN 50	DN 38 (1 1/2")	FPM	**0204-878**
Tri-Clamp DN 50	DN 50 (2")	EPDM	**0204-879**
Tri-Clamp DN 50	DN 50 (2")	FPM	**0204-880**

For individual needs, e.g. for connection to on-site Tri-clamp armatures:
Tri-clamp hose connector (1.4404):

DN 32 for hose DN 19	**0370-093**
DN 32 for hose DN 25	**0370-094**
DN 32 for hose DN 32	**0370-095**
DN 32 for hose DN 38	**0370-096**
DN 50 for hose DN 50	**0370-097**

Tri-clamp locking clamp (1.4408):

DN 25/32/40	**0370-088**
DN 50	**0370-084**

Tri-Clamp Seals:

DN 32, EPDM	**0314-596**
DN 32, FPM	**0314-597**
DN 40, EPDM	**0314-598**
DN 40, FPM	**0314-599**
DN 50, EPDM	**0314-590**
DN 50, FPM	**0314-591**

** If using for eccentric screw pumps B70 an additional reducing piece DN 50 to DN 25/32/40 (Item 5) and a locking clamp (Item. 6) are required.

3 Adapter fitting Tri-Clamp

DN 32 on tube fitting DIN 11851 Rd 58 x 1/6 (DIN 405)	**0172-668**
DN 50 on tube fitting DIN 11851 Rd 78 x 1/6 (DIN 405)	**0172-747**

● Suitable for transferring combustible and easy flammable liquids (e.g. ethanol, petrol) or in explosive hazard area.

Specification	Order-No.

Product detail

4 **Hose connector with Tri-clamp**

For connection of conductive hose onto the eccentric screw pump B70, discharge spout or Tri-Clamp armatures in explosive hazardous area.
The hose connector ensures a highly conduction transition between conductive hose and pump/armature.
The ohmic resistance between the armatures must be lower than 10^6 Ohm.
(Consisting of hose connector, clamp collars, locking clamp and seal)
Material: Stainless steel (1.4404)

Connection:	for hose Nominal diameter:	Seal:	
Tri-Clamp DN 32**	DN 19 (3/4")	EPDM	**0204-860** ●
Tri-Clamp DN 32**	DN 19 (3/4")	FPM	**0204-861** ●
Tri-Clamp DN 32**	DN 25 (1")	EPDM	**0204-862** ●
Tri-Clamp DN 32**	DN 25 (1")	FPM	**0204-863** ●
Tri-Clamp DN 32**	DN 32 (1 1/4")	EPDM	**0204-864** ●
Tri-Clamp DN 32**	DN 32 (1 1/4")	FPM	**0204-865** ●
Tri-Clamp DN 40**	DN 38 (1 1/2")	EPDM	**0204-866** ●
Tri-Clamp DN 40**	DN 38 (1 1/2")	FPM	**0204-867** ●
Tri-Clamp DN 50	DN 50 (2")	EPDM	**0204-868** ●
Tri-Clamp DN 50	DN 50 (2")	FPM	**0204-869** ●

For individual needs, e.g. for connection to on-site Tri-clamp armatures:
Tri-clamp hose connector (1.4404):

DN 32 for hose DN 19	**0300-174**
DN 32 for hose DN 25	**0300-175**
DN 32 for hose DN 32	**0300-176**
DN 40 for hose DN 38	**0300-177**
DN 50 for hose DN 50	**0300-178**

Clamp collar (1.4408):

DN 19	**0300-180**
DN 25	**0300-181**
DN 32	**0300-182**
DN 38	**0300-183**
DN 50	**0300-184**

Tri-Clamp locking clamp (1.4408):

DN 25/32/40	**0370-088**
DN 50	**0370-084**

Tri-Clamp Seals:

DN 32, EPDM	**0314-596**
DN 32, FPM	**0314-597**
DN 40, EPDM	**0314-598**
DN 40, FPM	**0314-599**
DN 50, EPDM	**0314-590**
DN 50, FPM	**0314-591**

** If using for eccentric screw pumps B70 an additional reducing piece DN 50 to DN 25/32/40 (Item 5) and a locking clamp (Item. 6) are required.

● Suitable for transferring combustible and easy flammable liquids (e.g. ethanol, petrol) or in explosive hazard area.

Accessories

For B70V SanitaryPlus and B70 PURE

Product detail	Specification	Order-No.
	5 Tri-Clamp reducing piece Suitable for connection of Tri-Clamp armatures DN 25/32/40 to a Tri-Clamp DN 50 connecting piece. Material: Stainless steel (1.4408) DN 50 onto DN 25/32/40	**0300-185** ●
	6 Tri-Clamp locking clamp Suitable for connection of armatures DN 50 to a connecting piece DN 50. Material: Stainless steel (1.4408) incl. seal. DN 50, Seal EPDM DN 50, Seal FPM	**0172-745** ● **0204-477** ●
	7 Discharge spout For mounting at the end of the hose for direct filling and transferring in containers incl. seal and clamp. Material: Stainless steel (1.4301/EPDM) Tri-Clamp DN 32 Tri-Clamp DN 40	**0370-098** ● **0370-099** ●
	8 Discharge spout For mounting at the end of the hose for direct filling and transferring in containers incl. seal and clamp. Material: Stainless steel (1.4571, 1.4404/EPDM). Tri-Clamp DN 50	**0172-748** ●
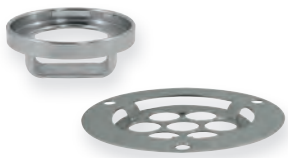	**22 Protection device for drum inliner** For mounting onto the pump foot. Protects sensitive drum inliner and bags from damage. For pump tube B70V-H SanitaryPlus For pump tube B70V 120.1	**0173-819** ● **0175-332**
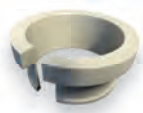	**11 Drum adapter in PP** For fixing the eccentric screw pump B70 in the drum opening. For pump tube ∅ 52-54 mm Universal for all current drum and bunghole openings	**0208-056**
	12 Clamping device SS (1.4571) To fasten the eccentric screw pump B70 in open-topped drums and containers. For pump tube ∅ 52-54 mm	**0205-052** ●
	13 Installation flange SS (1.4571) For fixing the eccentric screw pump B70 according to DIN 2573, DN 50, PN 6, to a companion flange. The flange is welded onto the pump tube. For pump tube ∅ 52-54 mm	**0170-310**
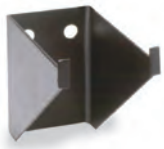	**14 Wall bracket** For safe storage of the eccentric screw pump B70 when not in use. for B70V for B70V-SR	**0204-309** **0204-307**

● Suitable for transferring combustible and easy flammable liquids (e.g. ethanol, petrol) or in explosive hazard area.

Specification		Order-No.	Product detail

16 Balancer

for eccentric screw pumps, with infinitely adjustable load balancer
for easy lifting and moving of the pump

Load bearing capacity: 18-22 kg	Tackle: 2 m	**0371-013**
Load bearing capacity: 22-25 kg	Tackle: 2 m	**0371-014**
Load bearing capacity: 25-30 kg	Tackle: 2 m	**0371-015**

17 Equipotential bonding cable

Serves to create electrically conductive connection between explosion proof pump
and container as earthing and equipontential bonding function.

2 m long with fastening clip		**0204-994** ●
2 m long with two fastening clips	for B70V-H Sanitary	**0204-992** ●

18 Ex-plug

Ensures the safe mains connection of the pump in explosive hazardous areas.
CEE round plug in accordance with EEx de IIC T6, splash proof in compliance with IP 65.

3-pole (alternating current) CEAG	for B70V-SR (Ex)	**0336-536** ●
3-pole (alternating current) STAHL	for B70V-SR (Ex)	**0336-540** ●
5-pole (three phase current) CEAG	for B70V (Ex)	**0336-537** ●
5-pole (three phase current) STAHL	for B70V (Ex)	**0336-541** ●

19 Ex-socket

Ensures the safe mains connection of the pump in explosive hazardous areas.
CEE-socket in accordance with EEx de IIC T6, splash proof in compliance with IP 65.

3-pole (alternating current) CEAG	for B70V-SR (Ex)	**0336-531** ●
3-pole (alternating current) STAHL	for B70V-SR (Ex)	**0336-542** ●
5-pole (three phase current) CEAG	for B70V (Ex)	**0336-420** ●
5-pole (three phase current) STAHL	for B70V (Ex)	**0336-543** ●

23 Motor protective switch for motor B70V (Ex)

Explosion proof according to EEx de IIC T6 with thermal and electromagnetic trip,
protection class IP 66. A lifting device and two cable protective coverings
are necessary for the mounting.

Ex, 1,6 - 2,5 A	**0335-414** ●
Ex, 2,5 - 4,0 A	**0335-419** ●
Ex, 4,0 - 6,3 A	**0335-420** ●

18 Coupling part, motor side

When sourcing your own motor please order the correct coupling
to suit the relative shaft diameter.

Shaft diameter:	ø 14 mm	**0302-028**
	ø 19 mm	**0302-027**
	ø 24 mm	**0302-026**
	ø 28 mm (only in combination with intermediate flange)	**0302-029**
Intermediate flange for	ø 28 mm	**0172-850**

19 Lifting device

To simplify the process of lifting the pump in and out of drums or containers.
When using an explosion proof driving motor the Ex-protective plug
is mounted onto the lifting device.

for pump tube HD-E	**0155-154**
for B70V-SR with universal motor	**0174-607**

● Suitable for transferring combustible and easy flammable liquids (e.g. ethanol, petrol)
or in explosive hazard area.

Accessories

For PURE drum and container pumps

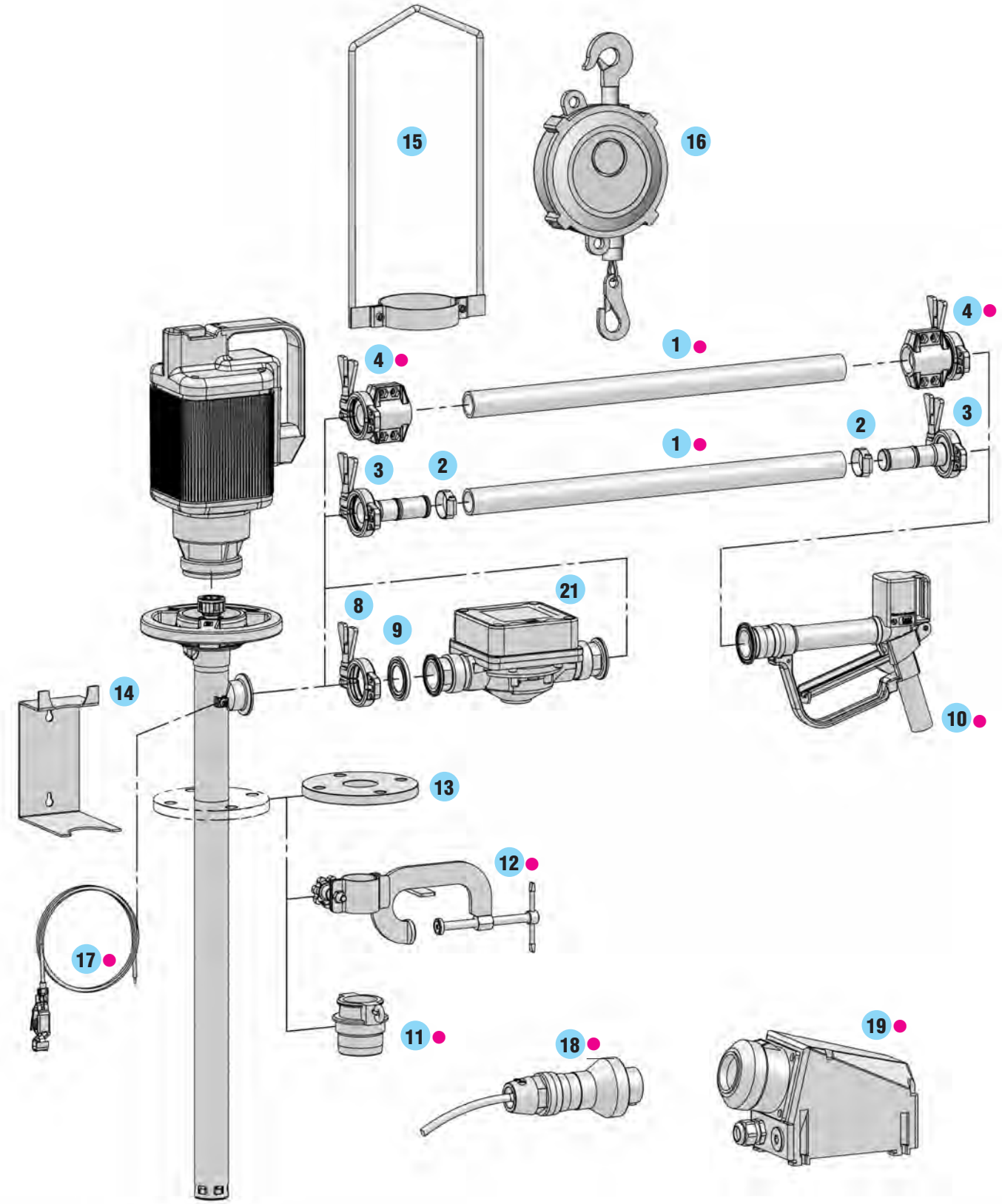

1 ●	Hose	10 ●	Nozzle	16	Balancer
2	Hose clamp	11 ●	Drum adapter	17 ●	Equipotential bonding cable
3	Hose connection	12 ●	Clamping device	18 ●	Ex-plug
4 ●	Hose connector	13	Installation flange	19 ●	Ex-socket
8	Tri-Clamp locking clamp	14	Wall bracket	21	Flow meter
9	Tri-Clamp seal	15	Lifting device		

● Suitable for transferring combustible and easy flammable liquids (e.g. ethanol, petrol) or in explosive hazard area.

Specification		Order-No.	Product detail

1 PVC spiral hose

Hose for food liquids made of PVC with woven layer and embedded galvanized steel spiral, smooth interior and exterior, complies with EU Regulation 1935/2004 EG.

Operating pressure:	up to 14 bar	
Temperature of medium:	-5 °C up to +65 °C	
Nominal diameter:	Weight:	
DN 19 (3/4")	0,45 kg/m	**0374-466**
DN 25 (1")	0,67 kg/m	**0374-467**
DN 32 (1 1/4")	0,80 kg/m	**0374-468**
DN 38 (1 1/2")	1,15 kg/m	**0374-469**

1 Food chemical hose

Colour coding: “blue/white/blue”.
Suitable for 95% of all customary industrial chemicals such as almost all acids and alkalis, mineral oil products and solvents of all kinds. Ideal for food and luxury foodstuffs, pharmaceuticals, cosmetics and hygiene products, complies with EU Regulation 1935/2004 EC and FDA and ATEX requirements.
Foodstuff conformity of inner layer.
Internal finish: UPE light with spiraled OHM conductive stripes UPE black, smooth, non-bleeding, abrasion-resistant.
Intermediate layer: EPDM conductive
External finish: EPDM light grey, conductive, non-bleeding, ozone- and UV resistant, hardly flammable, Type Ω/T smaller than 10^6 Ohm (acc. to DIN EN 12115:2011).

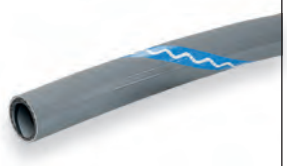

Operating pressure:	up to 16 bar	
Temperature of medium:	-30 up to +100 °C can be sterilized at 130°C for 30 minutes (open system)	
Nominal diameter:	Weight:	
DN 19 (3/4”)	0,6 kg/m	**0374-475** ●
DN 25 (1”)	0,8 kg/m	**0374-476** ●
DN 32 (1 1/4”)	0,9 kg/m	**0374-477** ●
DN 38 (1 1/2”)	1,2 kg/m	**0374-478** ●

2 Stepless 1-ear hose clamp

1-ear hose clamp of stainless steel for the safe fixing of different hoses onto the hose connection.
(Advices for selecting the suitable hose clamp - see hoses).

for Tri-Clamp 0204-870 / PVC spiral hose DN 19, fabric reinforced	**0300-417**
for Tri-Clamp 0204-870 / Food chemical hose DN 19	**0300-422**
for Tri-Clamp 0204-872 / PVC spiral hose DN 25, fabric reinforced	**0300-446**
for Tri-Clamp 0204-872 / Food chemical hose DN 25	**0300-442**
for Tri-Clamp 0204-874 / PVC spiral hose DN 32, fabric reinforced	**0300-453**
for Tri-Clamp 0204-874 / Food chemical hose DN 32	**0300-460**

● Suitable for transferring combustible and easy flammable liquids (e.g. ethanol, petrol) or in explosive hazard area.

Accessories

For PURE drum and container pumps

Product detail	Specification	Order-No.

Caution:
The assembler is responsible for the professional bonding of the hose according to the current Pressure Equipment Directive.

3 Hose connection with Tri-Clamp
For connection of the hose onto the pump, nozzle or Tri-clamp armatures (consisting of hose connector, locking clamp and seal)
Material: stainless steel (1.4404)

Connection:	for hose with nominal diameter:	Seal:	
Tri-Clamp DN 32	DN 19 (3/4")	EPDM	**0204-870**
Tri-Clamp DN 32	DN 19 (3/4")	FPM	**0204-871**
Tri-Clamp DN 32	DN 25 (1")	EPDM	**0204-872**
Tri-Clamp DN 32	DN 25 (1")	FPM	**0204-873**
Tri-Clamp DN 32	DN 32 (1 1/4")	EPDM	**0204-874**
Tri-Clamp DN 32	DN 32 (1 1/4")	FPM	**0204-875**
Tri-Clamp DN 32	DN 38 (1 1/2")	EPDM	**0204-876**
Tri-Clamp DN 32	DN 38 (1 1/2")	FPM	**0204-877**

For individual needs, e.g. for connection to on-site Tri-clamp armatures:
Tri-clamp hose connector (1.4404):

DN 32 for hose DN 19	**0370-093**
DN 32 for hose DN 25	**0370-094**
DN 32 for hose DN 32	**0370-095**
DN 32 for hose DN 38	**0370-096**

Tri-clamp locking clamp (1.4408):

DN 25/32/40	**0370-088**

Tri-Clamp seals:

DN 32, EPDM	**0314-596**
DN 32, FPM	**0314-597**
DN 40, EPDM	**0314-598**
DN 40, FPM	**0314-599**

3 Adapter fitting Tri-Clamp

DN 32 on tube fitting DIN 11851 Rd 58 x 1/6 (DIN 405)	**0172-668**

4 Hose connector with Tri-clamp
For connection of conductive hose onto the pump, nozzle or Tri-clamp armatures in explosive hazardous area. The hose connector ensures a highly conduction transition between conductive hose and pump/armature. The ohmic resistance between the armatures must be lower than 10^6 Ohm. (Consisting of hose connector, clamp collars, locking clamp and seal).
Material: stainless steel (1.4404)

Connection:	for hose with nominal diameter:	Seal:	
Tri-Clamp DN 32	DN 19 (3/4")	EPDM	**0204-860** ●
Tri-Clamp DN 32	DN 19 (3/4")	FPM	**0204-861** ●
Tri-Clamp DN 32	DN 25 (1")	EPDM	**0204-862** ●
Tri-Clamp DN 32	DN 25 (1")	FPM	**0204-863** ●
Tri-Clamp DN 32	DN 32 (1 1/4")	EPDM	**0204-864** ●
Tri-Clamp DN 32	DN 32 (1 1/4")	FPM	**0204-865** ●
Tri-Clamp DN 40**	DN 38 (1 1/2")	EPDM	**0204-866** ●
Tri-Clamp DN 40**	DN 38 (1 1/2")	FPM	**0204-867** ●

For individual needs, e.g. for connection to on-site Tri-clamp armatures:
Tri-clamp hose connector (1.4404):

DN 32 for hose DN 19	**0300-174**
DN 32 for hose DN 25	**0300-175**
DN 32 for hose DN 32	**0300-176**
DN 40 for hose DN 38	**0300-177**

Clamp collar (1.4408):

DN 19	**0300-180**
DN 25	**0300-181**
DN 32	**0300-182**
DN 38	**0300-183**

Tri-Clamp locking clamp (1.4408):

DN 25/32/40	**0370-088**

Tri-Clamp Seals:

DN 32, EPDM	**0314-596**
DN 32, FPM	**0314-597**
DN 40, EPDM	**0314-598**
DN 40, FPM	**0314-599**

● Suitable for transferring combustible and easy flammable liquids (e.g. ethanol, petrol) or in explosive hazard area.

Specification	Order-No.	Product detail

10 Nozzle SS

Ideally suitable for filling and transferring liquids – also for combustible and highly flammable liquids – in food and pharmaceutical industry.
Stainless steel (1.4571) housing and valve tappet. With hoop guard and rotating joint.

Operating pressure:	up to 3 bar
Viscosity:	up to 760 mPas
Flow rate:	up to 50 l/min. (water)
Temperature of medium:	up to 80 °C
Weight:	approx. 1 kg
Connection:	Tri-Clamp DN 32
Seal:	FPM or EPDM

Basic price nozzle SS▲	**0204-370** ●
Additional price version: PURE FPM▲	**0204-820** ●
Additional price version: PURE EPDM®▲	**0204-821** ●

▲Please choose Order-No. basic price nozzle + Order No. additional price version: PURE

11 Drum adapter in PP

For fixing the pump in the drum opening.
For pump tube ∅ 41 mm
Outer thread G 2 — **0208-007**

11 Drum adapter in PE (electrically conductive)

For fixing the pump in the drum opening.
For pump tube ∅ 41 mm

Outer thread G 2	**0208-055** ●
Outer thread BCS 56 x 4	**0208-052** ●
Outer thread BCS 70 x 6	**0208-054** ●

12 Clamping device SS (1.4571)

To fasten the drum pumps in open-topped drums and containers.
For pump tube ∅ 41 mm — **0205-040** ●

13 Installation flange SS (1.4571)

For fixing the drum and container pump according to DIN 2573, DN 50, PN 6 to a companion flange. The flange is welded onto the pump tube.
For pump tube ∅ 41 mm — **0151-622**

14 Wall bracket

For safe storage of the pump when not in use. — **0204-308**

● Suitable for transferring combustible and easy flammable liquids (e.g. ethanol, petrol) or in explosive hazard area.

Accessories

For PURE drum and container pumps

Product detail	Specification	Order-No.
	15 Lifting device To simplify the process of lifting the pump in and out of drums and containers. For pumps with motors MA II and ME II For pumps with motors B4/GT	 **0211-047** **0214-196**
	16 Balancer for drum pump, with infinitely adjustable load balancer for easy lifting and moving of the pump. Load bearing capacity: 10-14 kg Tackle: 2 m	 **0371-012**
	17 Equipotential bonding cable Serves to create electrically conductive connection between explosion proof pump and container as earthing and equipontential bonding function. 2 m long with fastening clip	 **0204-994** ●
	18 Ex-plug Ensures the safe mains connection of the pump in explosive hazardous areas. CEE round plug in accordance with EEx de IIC T6, splash proof in compliance with IP 65. 3-pole (alternating current) system CEAG for motor ME II 3-pole (alternating current) system STAHL for motor ME II	 **0336-536** ● **0336-540** ●
	19 Ex-socket Ensures the safe mains connection of the pump in explosive hazardous areas. CEE-socket in accordance with EEx de IIC T6, splash proof in compliance with IP 65. 3-pole (alternating current) system CEAG for motor ME II 3-pole (alternating current) system STAHL for motor ME II	 **0336-531** ● **0336-542** ●

● Suitable for transferring combustible and easy flammable liquids (e.g. ethanol, petrol) or in explosive hazard area.

	Specification	Order-No.	Product detail
21	**Modular electronical flow meter system, TS series, type VA10 in PURE version** For measuring of liquid foodstuffs, pharmaceuticals and cosmetics. Wide application range: directly at the drum pump, decentralized or in-line operation possible. With touch screen display, multilingual menu and simple plain text operation. Also with volume preselection. (Suitable connecting parts see items 8 and 9) For more details see separate flow meter leaflet.		
8	**Tri-Clamp locking clamp (1.4408)** For fixing the flow meter VA10 PURE at the pump. (Suitable seal see item 9) DN 25/32/40	**0370-088** ●	
9	**Tri-Clamp seal** For fixing the flow meter VA10 PURE at the pump. DN 32, EPDM DN 32, FPM DN 40, EPDM DN 40, FPM	 **0314-596** **0314-597** **0314-598** **0314-599**	

● Suitable for transferring combustible and easy flammable liquids (e.g. ethanol, petrol) or in explosive hazard area.

Accessories

Contact-free indirect measurement

Product detail	Specification	Order-No.
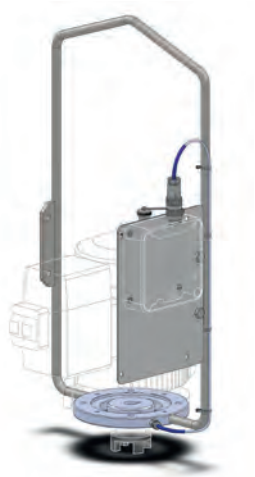	**20 Lifting device with integrated impulse sensor** Comprises of: Impulse sensor with connecting cable and 14-wire coupling plug, lifting device and flange plate. (Please order suitable impulse transmitter and control unit additionally)	
	Additional price* for three-phase motors up to 1.1 kW	**0172-891**
	Additional price* for three-phase motors up to 1.5 kW and explosion proof three-phase motors Ex	**0172-892** ●
	Complete set for retrofitting available pumps	**0172-890** ●
	*(Please indicate Ref. No. for additional price when ordering a pump)	
	21 Impulse transmitter Must be ordered additionally suitable for the shaft diameter of the motor	
	For shaft diameters: Ø 19 mm	**0172-824**
	Ø 20 mm	**0172-825**
	Ø 24 mm	**0172-826**
	Ø 25 mm	**0172-827**
	Ø 28 mm	**0172-828**
	Ø 30 mm	**0172-829**

● Suitable for transferring combustible and easy flammable liquids (e.g. ethanol, petrol) or in explosive hazard area.

Specification		Order-No.	Product detail
23 **Control unit**			
With touch screen display and menu-navigated operation. Is intended for evaluation of impulses and display of flow volume, battery-operated**			
Control unit BE10		**0230-000**	
Control unit Ex BE10B		**0230-010** ●	
Power supply unit NG10 230 V			
for external power supply of the operating unit 220-240 V, 50-60 Hz, II (2) G [Ex ib] IIC		**0230-230**	
Accessories optional			
Relay module RM30			
For three-phase motors up to 1.5 kW allows the filling with pre-selection (batch function), 400 V, 1.5 kW, 50 Hz, II (2) G [Ex ib] IIC		**0230-220**	
Power cable RM30 400V			
400 V, 50 Hz, 5-wire, 5 m long	For RM30	**0211-388**	
Connecting cable motor RM30 400V			
400 V, 50 Hz, 5-wire, 0.6 m long	For RM30	**0211-386**	
Relay module RM10			
For three-phase motors with frequency converter allows the filling with pre-selection (batch function), 220-240 V, 50-60 Hz, II (2) G [Ex ib] IIC		**0230-200**	
Power cable RM10 230V			
230 V, 50 Hz, 5 m long	For RM10	**0211-155**	
Adapter cable motor RM-FU 230V/24V			
For three-phase motors with frequency converter 230V AC/24V DC	For RM10	**0230-323**	

** Limited battery operation without power supply unit possible

● Suitable for transferring combustible and easy flammable liquids (e.g. ethanol, petrol) or in explosive hazard area.

Twice the **COMPETENCE**...

Professional Fluid Management

- Drum pump sets
- Drum and container pumps
- Eccentric screw drum pumps
- Flow meter systems
- Air operated double diaphragm pumps
- Vertical and horizontal centrifugal pumps

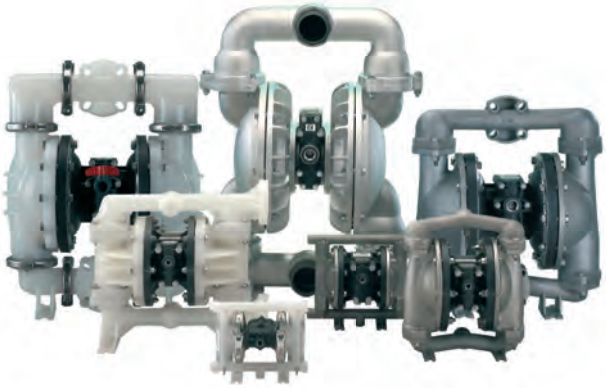

Lutz Pumpen GmbH
P.O. Box 14 62 · D-97864 Wertheim · Phone: (+49 93 42) 8 79-0 · Fax: (+49 93 42) 87 94 04 · E-Mail: info@lutz-pumpen.de
www.lutz-pumpen.de

...simply **UNIQUE**

Lutz®
The Fluid Managers

A Measured Step Forward

- Dosing pumps and accessories
- Chlorinators
- Measuring and control technology
- System and process technology
- Chemical centrifugal pumps
- Water disinfection

Lutz Pumpen GmbH

P.O. Box 14 62
D-97864 Wertheim
Phone: (0 93 42) 8 79-0
Fax: (0 93 42) 87 94 04
E-Mail: info@lutz-pumpen.de

www.lutz-pumpen.de

State of art: 03.18 Order No. 0699-315 500/03.18